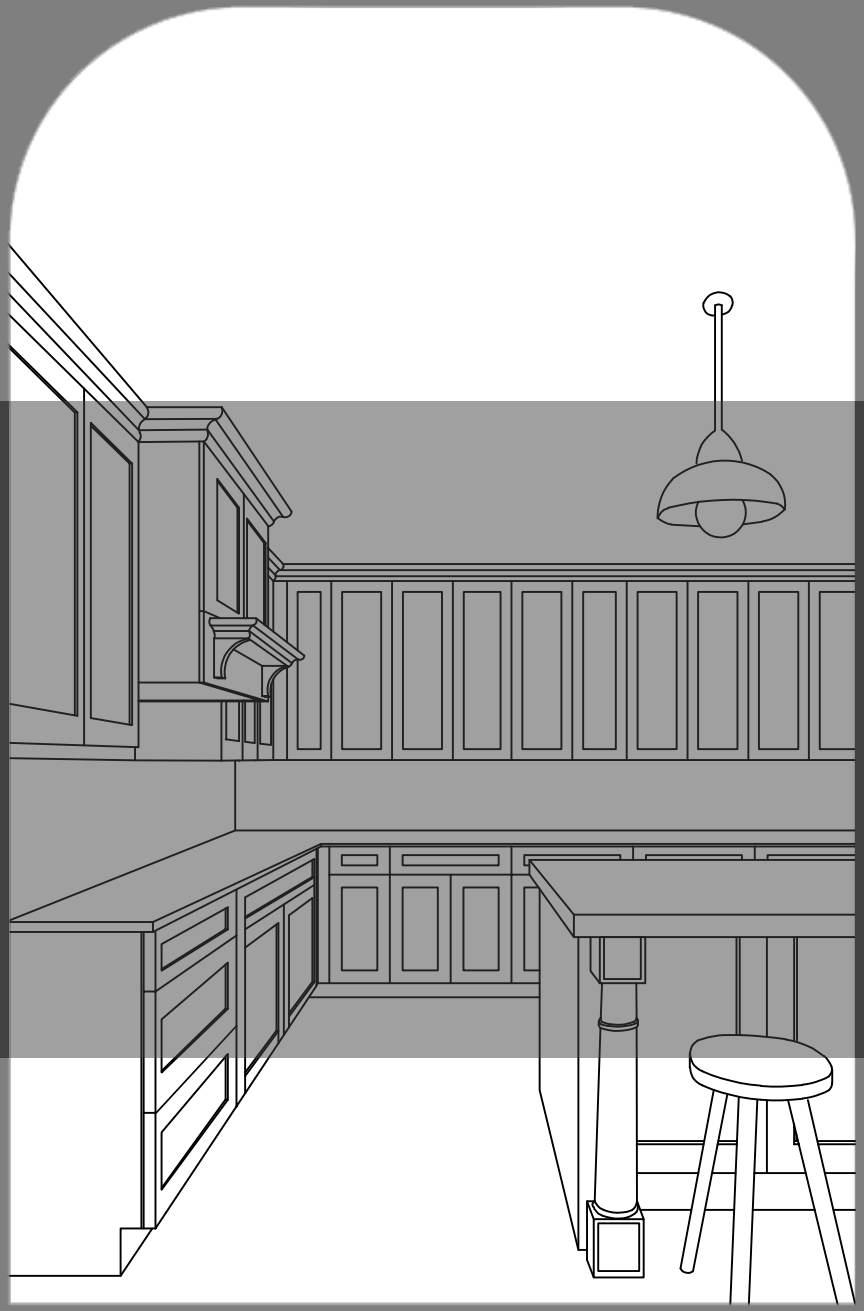

GHI Cabinetry

SPEC GUIDE

Contents

ACW - - - - - - - - - - - - - - - - - - PP. 2 – 16

SHG PCG MJS - - - - - - - - - - - PP. 17 – 31

CCB - - - - - - - - - - - - - - - - - - PP. 32 – 36

NTL - - - - - - - - - - - - - - - - - - PP. 37 – 51

UFO VA - - - - - - - - - - - - - - - PP. 52 – 53

FTS RWS - - - - - - - - - - - - - - PP. 54 – 68

SNS SNW - - - - - - - - - - - - - - PP. 69 – 84

RGO - - - - - - - - - - - - - - - - - - PP. 85 – 95

Accessories - - - - - - - - - - - - PP. 96 – 102

W0930	W1230	W1530	W1830	W2130	W2430
W0936	W1236	W1536	W1836	W2136	W2436
W0942	W1242	W1542	W1842	W2142	W2442

GHI Cabinetry

ACW

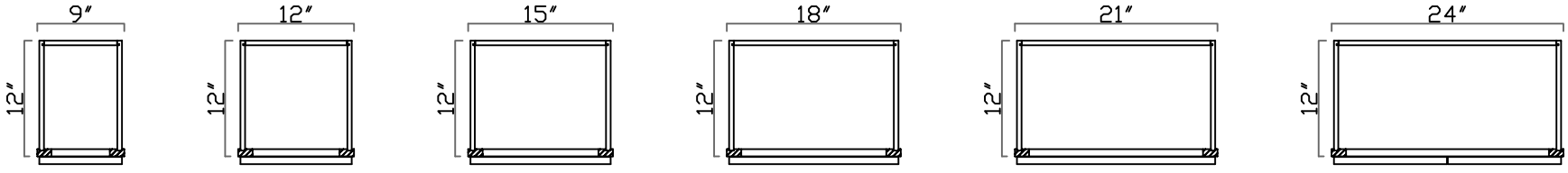

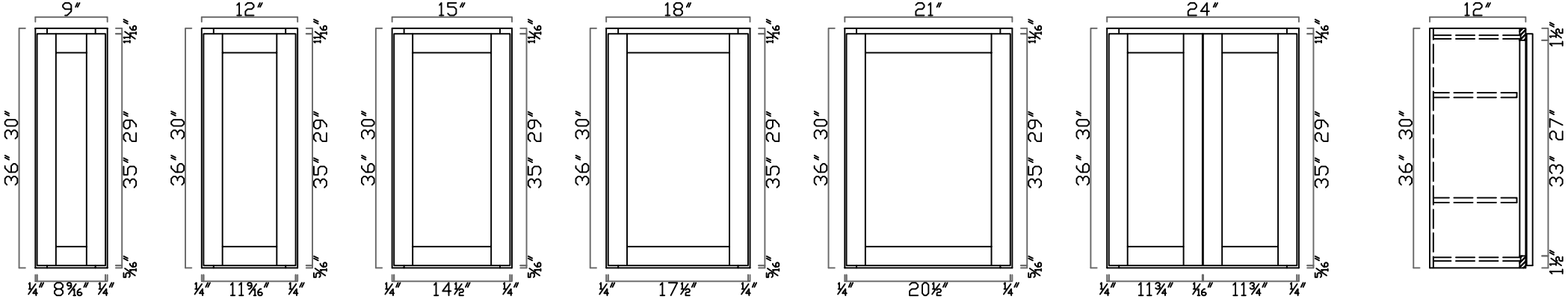

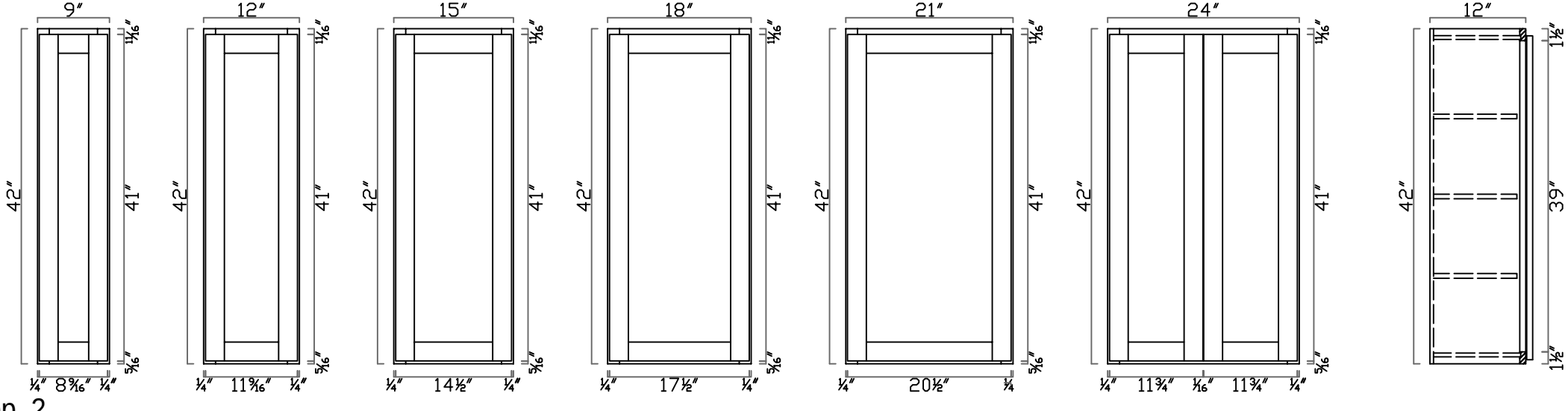

W2730	W3030	W3330	W3630
W2736	W3036	W3336	W3636
W2742	W3042	W3342	W3642

GHI Cabinetry

ACW

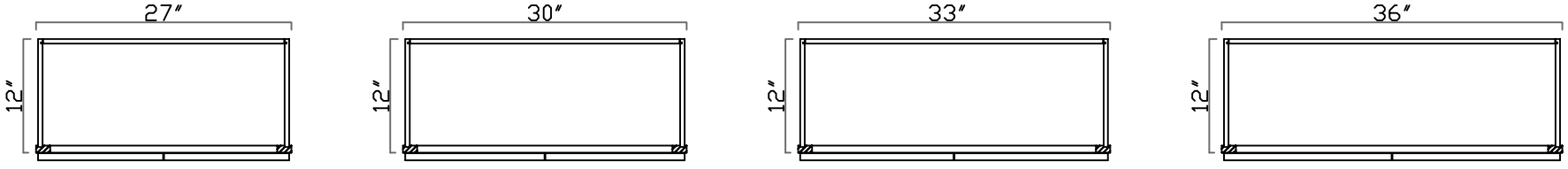

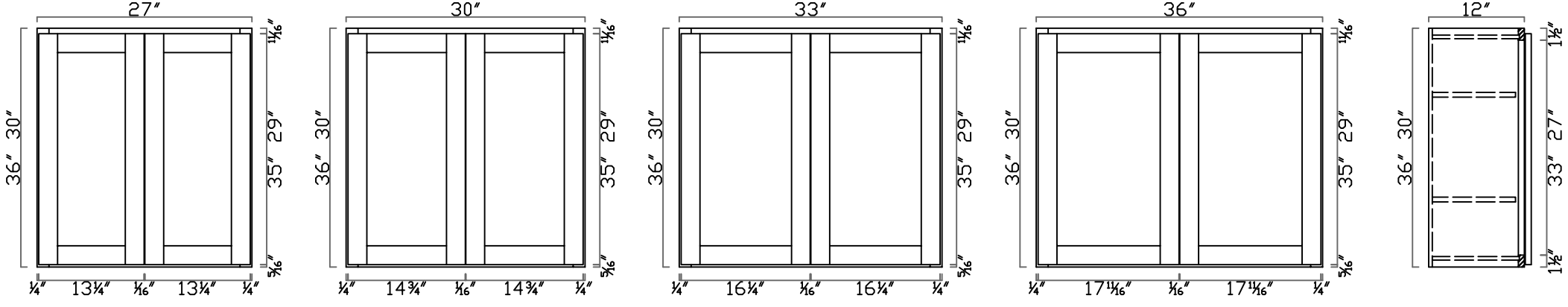

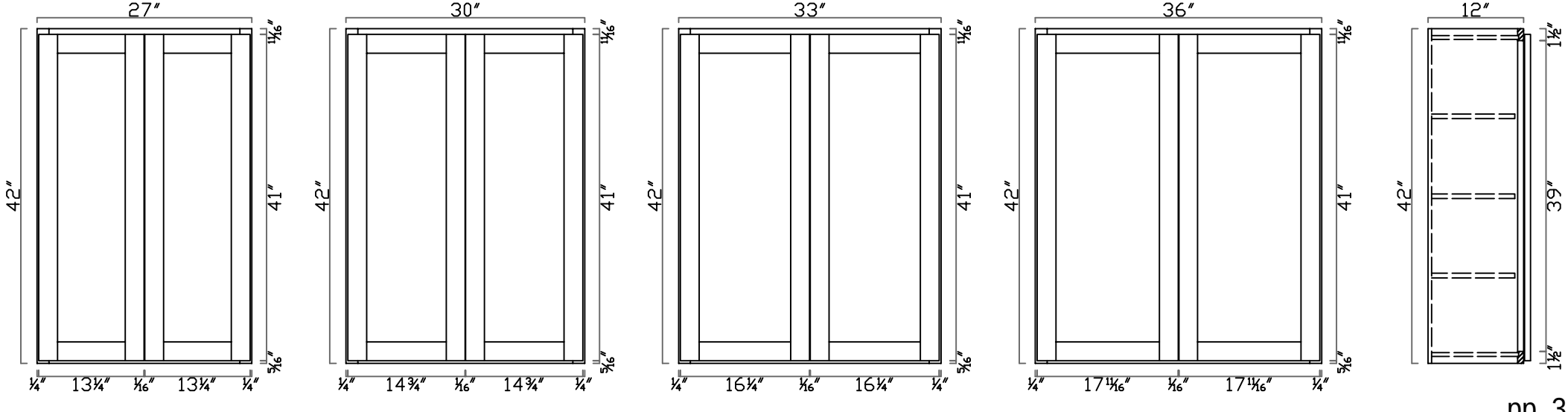

WAC2430	WBC2730	WDC2430	GHI Cabinetry
WAC2436		WDC2436	
WAC2442		WDC2442	ACW

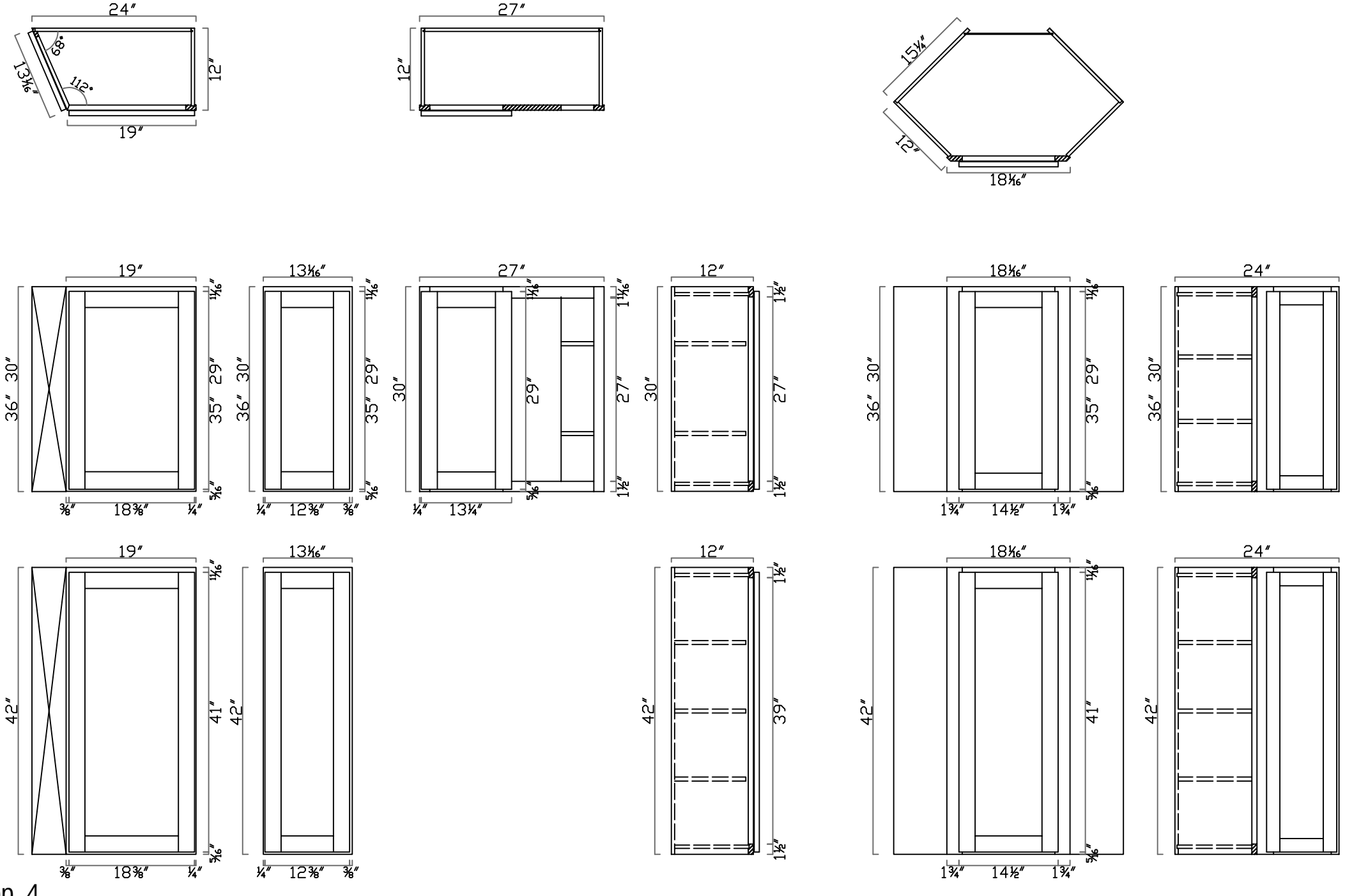

WDC2736	W3012	W3015	W3612	W3615
WDC2742	W3018	W3024	W3618	W3624

GHI Cabinetry

ACW

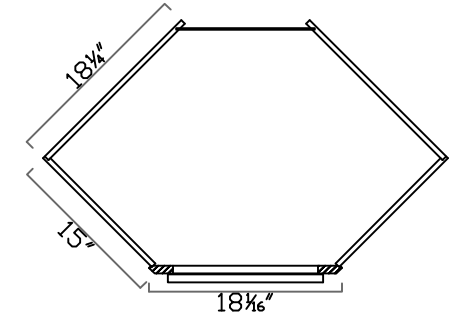

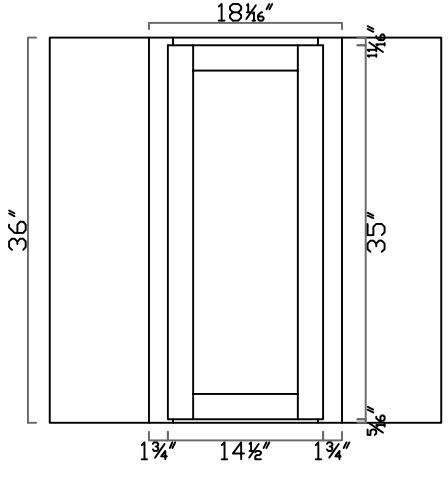

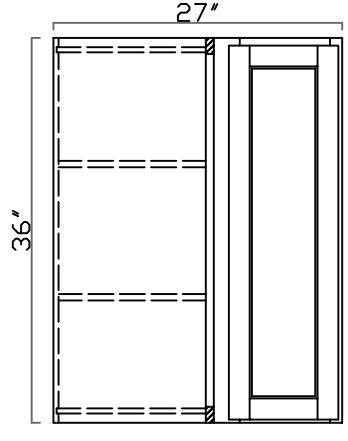

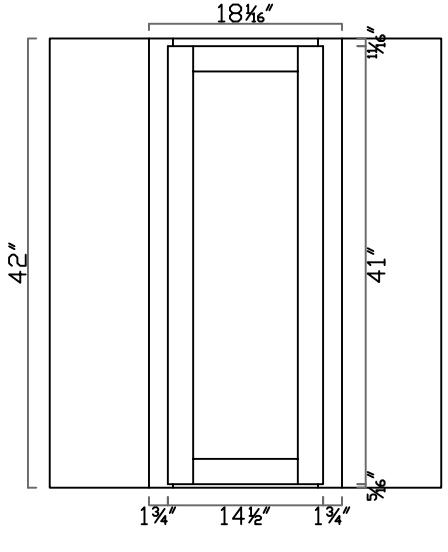

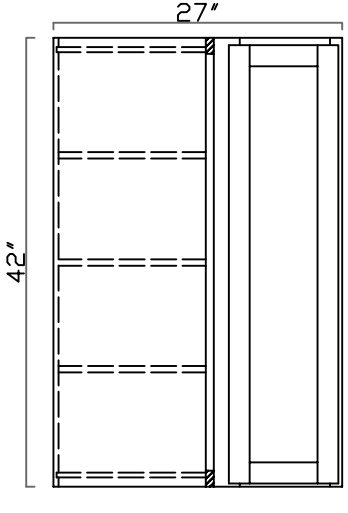

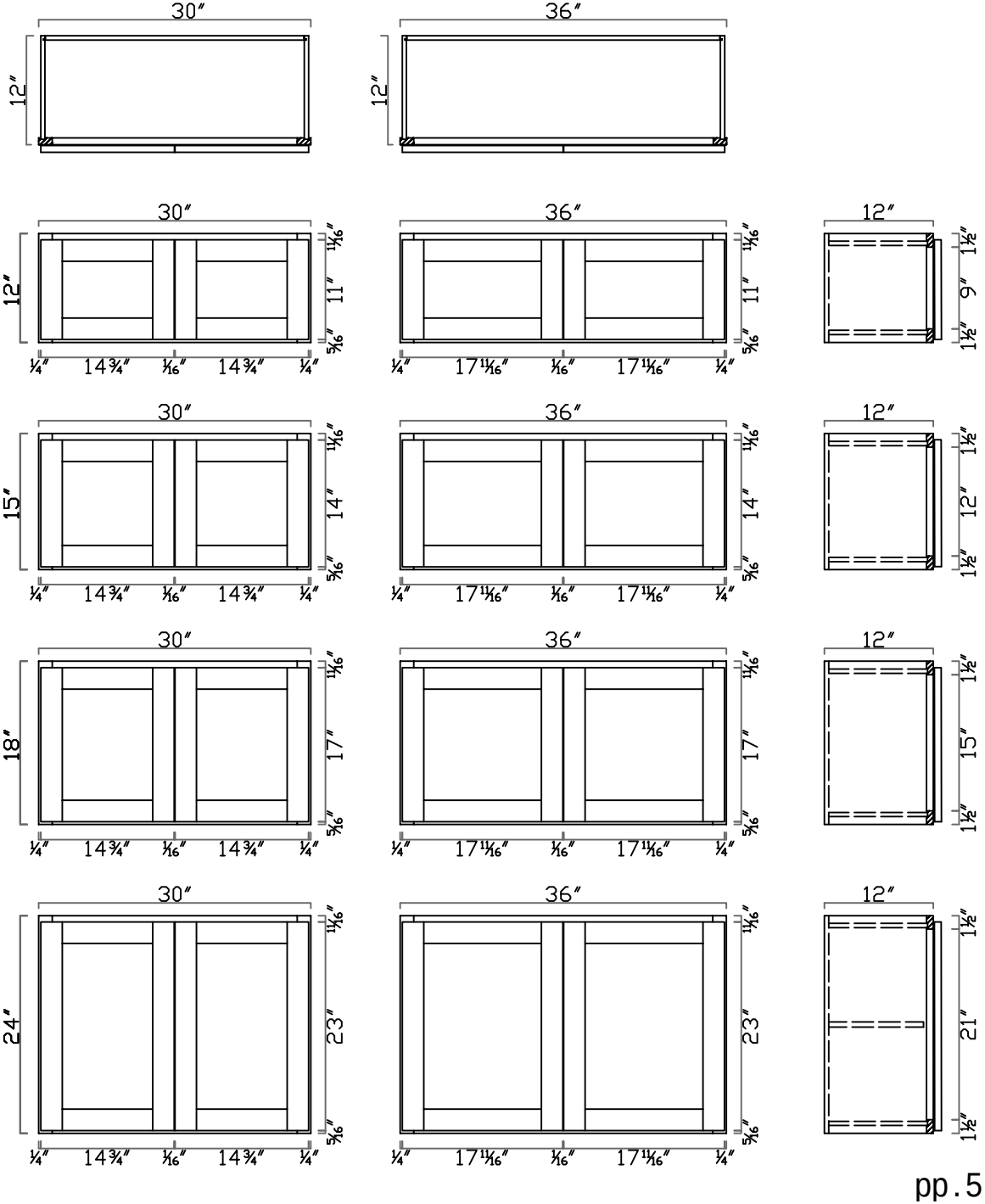

W2415	W3315	W183624	W243624
W331224	W361224	W184224	W244224
W331524	W361524		

GHI Cabinetry

ACW

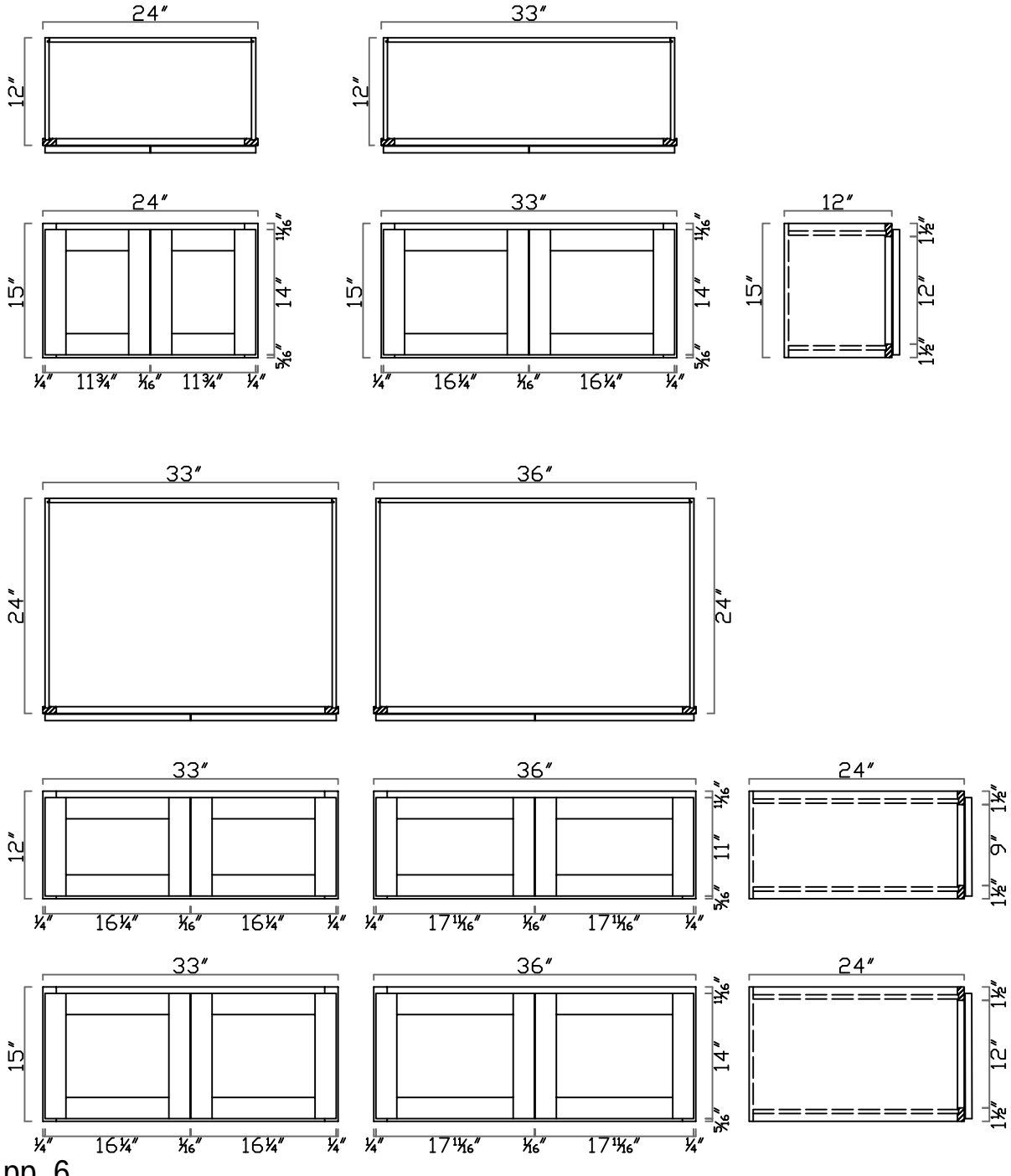

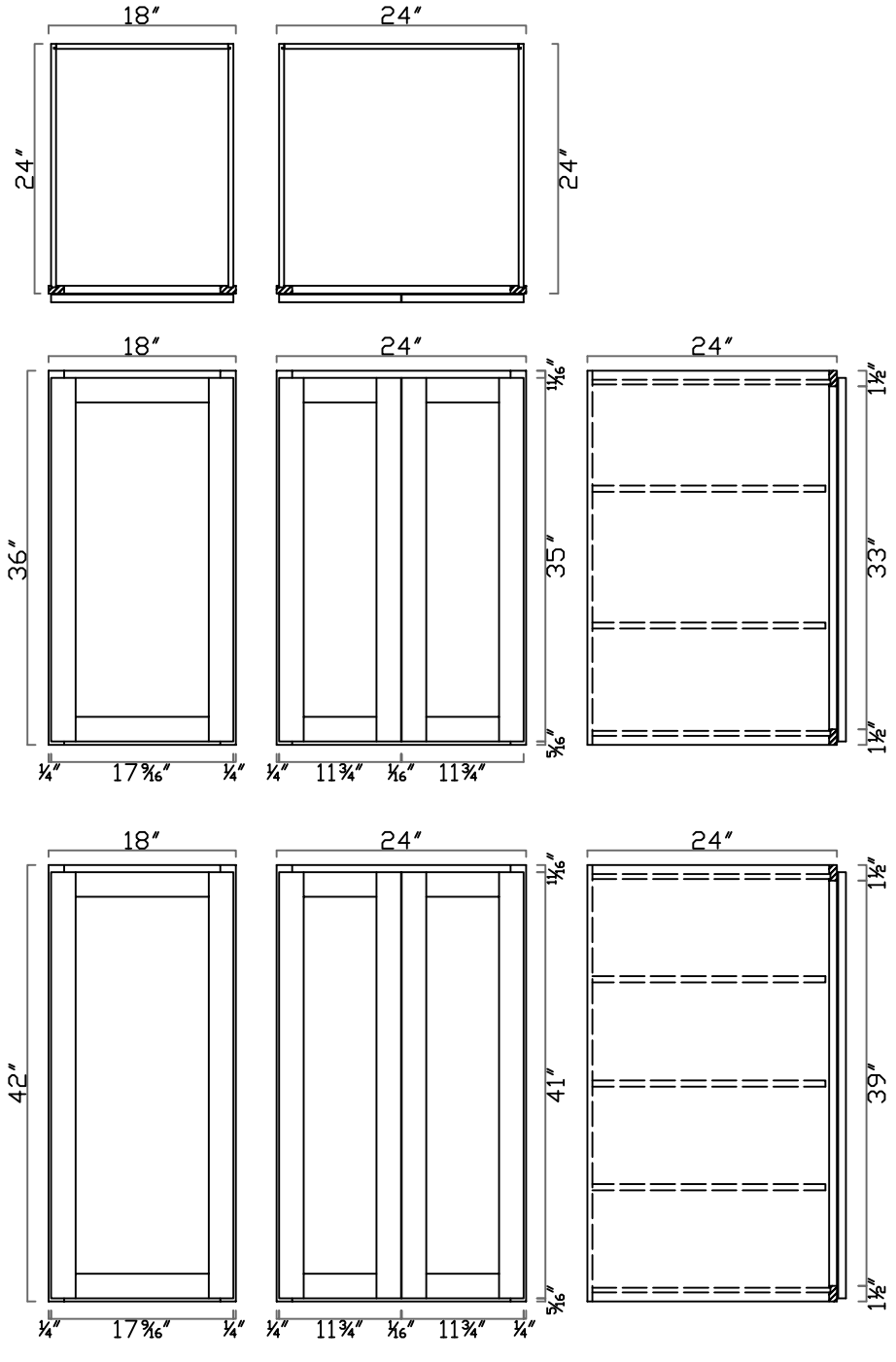

W361824		MC3018	GHI Cabinetry
W332424	W362424	RP3015	WR3015
		WR1818	ACW

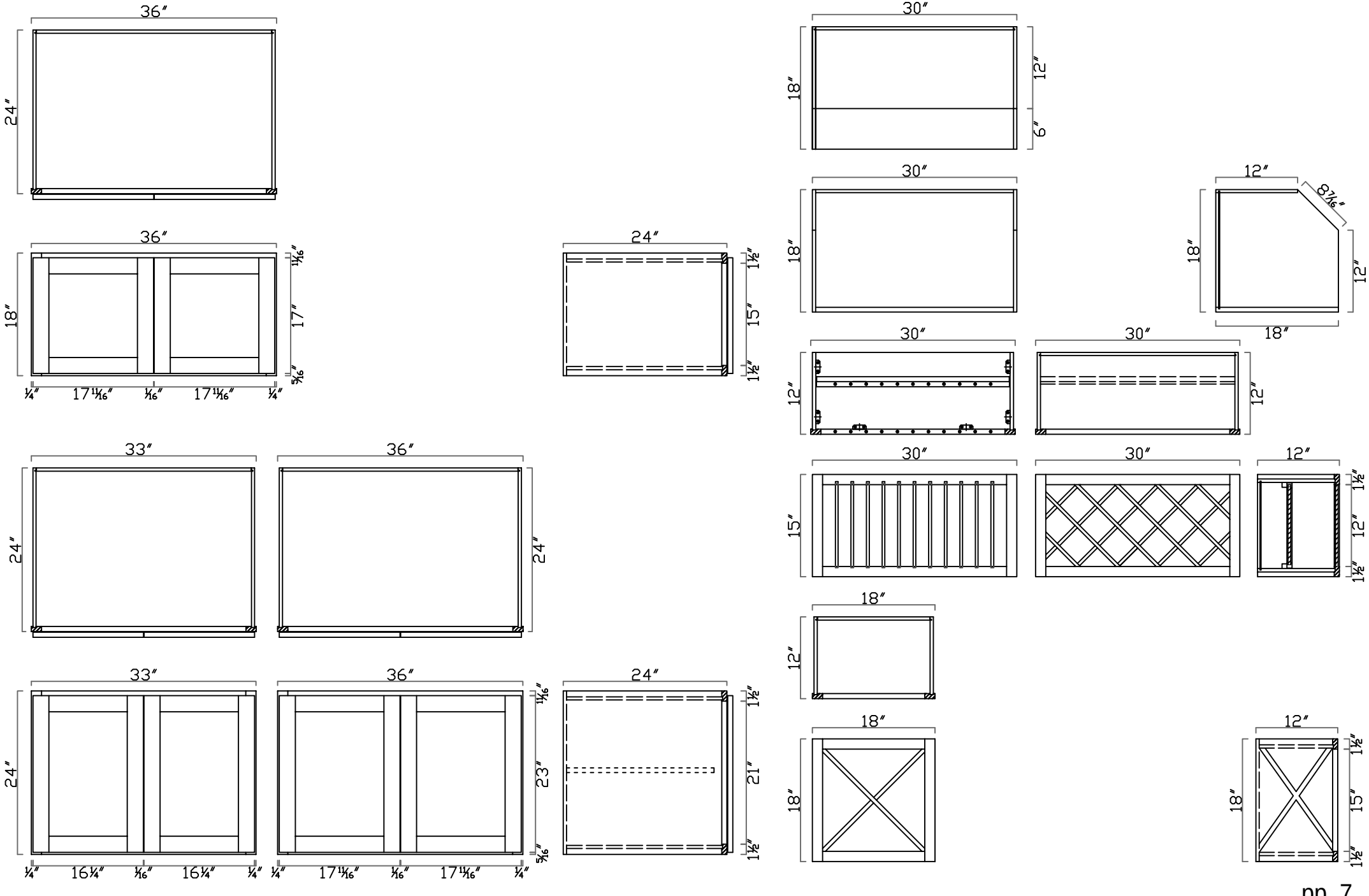

B09 (FH)	B18 (FH)	B18	B21
B12	B15	B24	B27

GHI Cabinetry

ACW

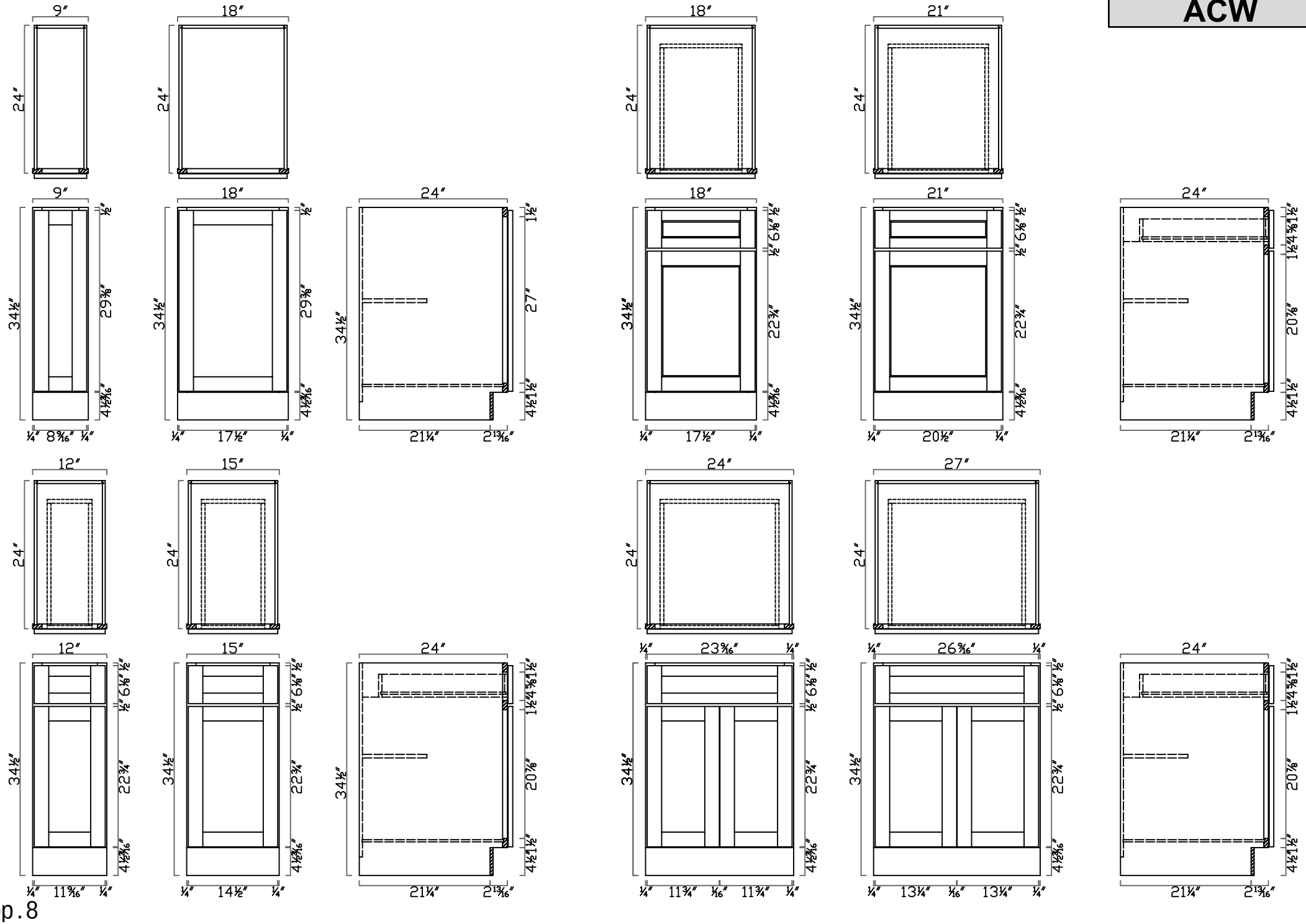

B30	B33	MB30
B36		BBC42-45

GHI Cabinetry

ACW

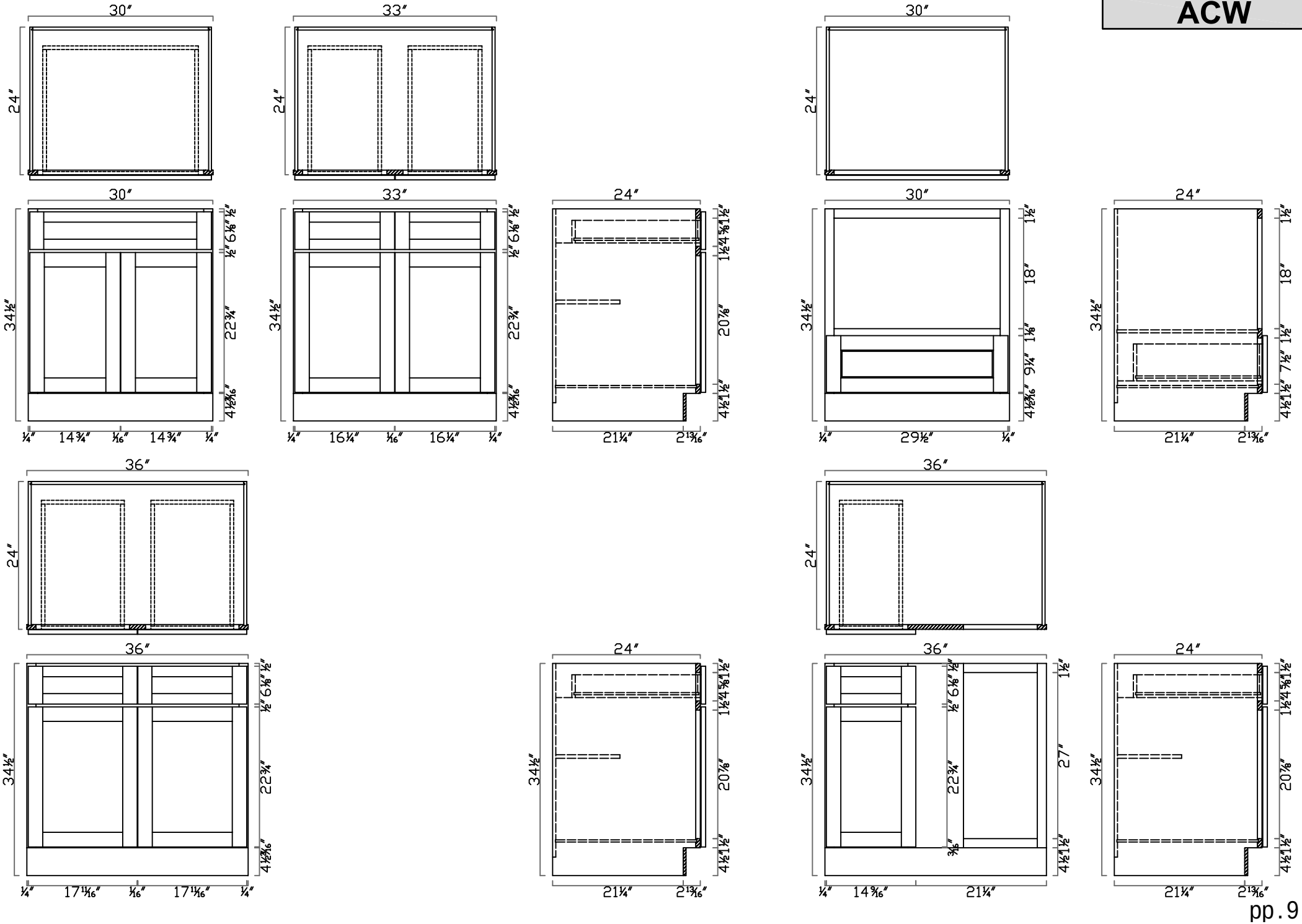

DB15	DB18	DB30
DB21	DB24	DB36

GHI Cabinetry

ACW

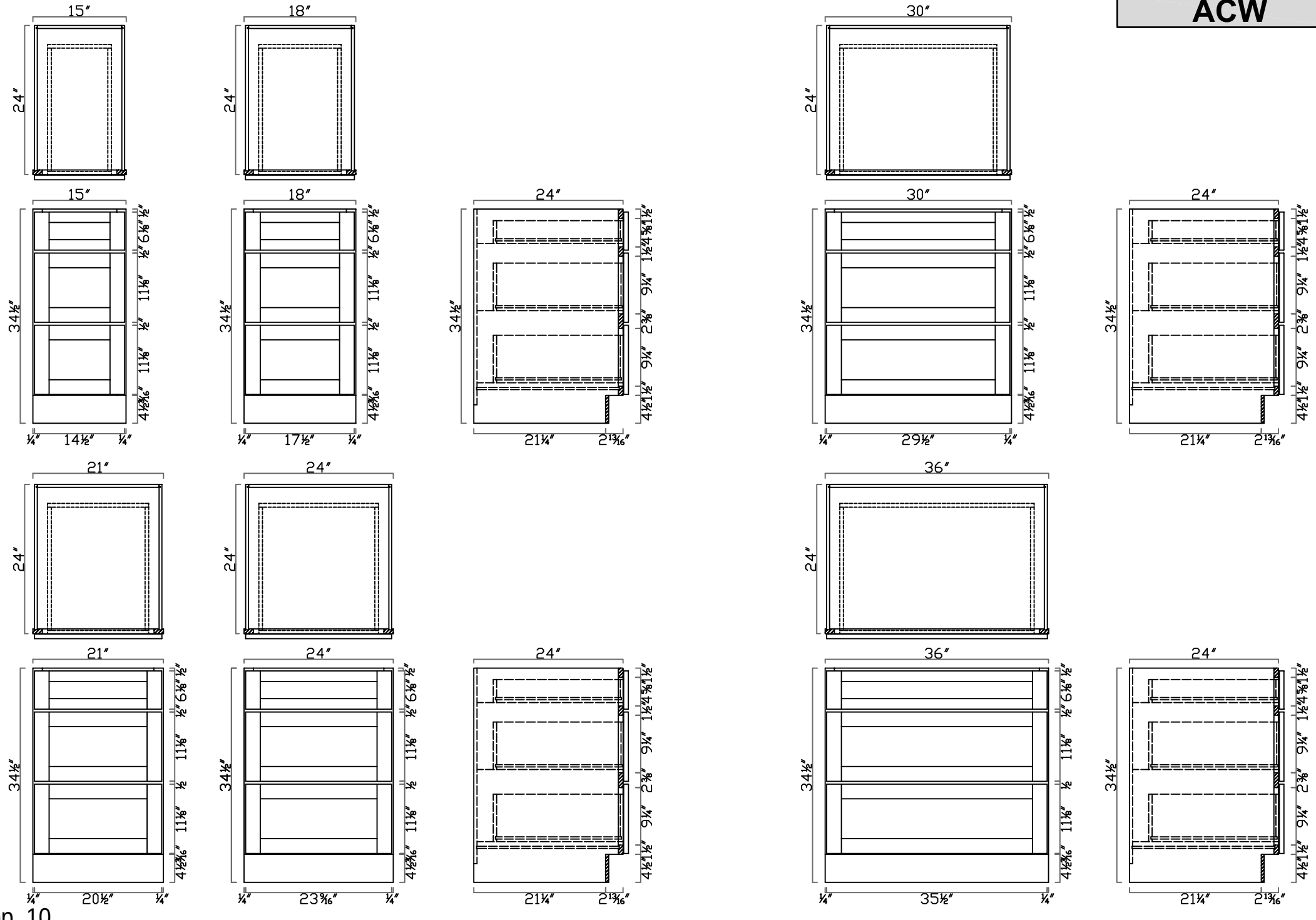

DB24-2	DB30-2	BC24
DCB3612		ER3309

GHI Cabinetry

ACW

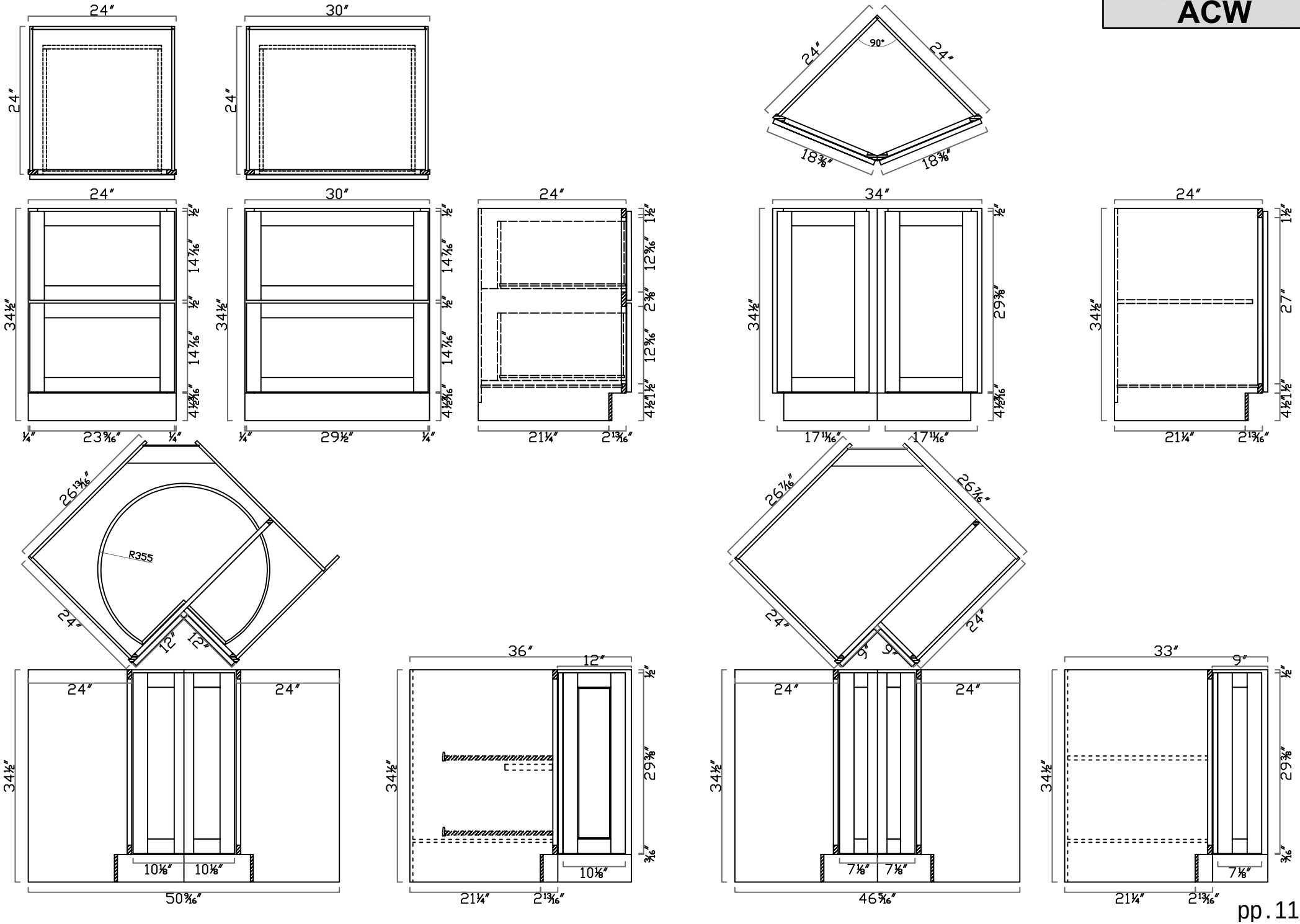

SB30	SB33	FSB36
SB36		SB42

GHI Cabinetry

ACW

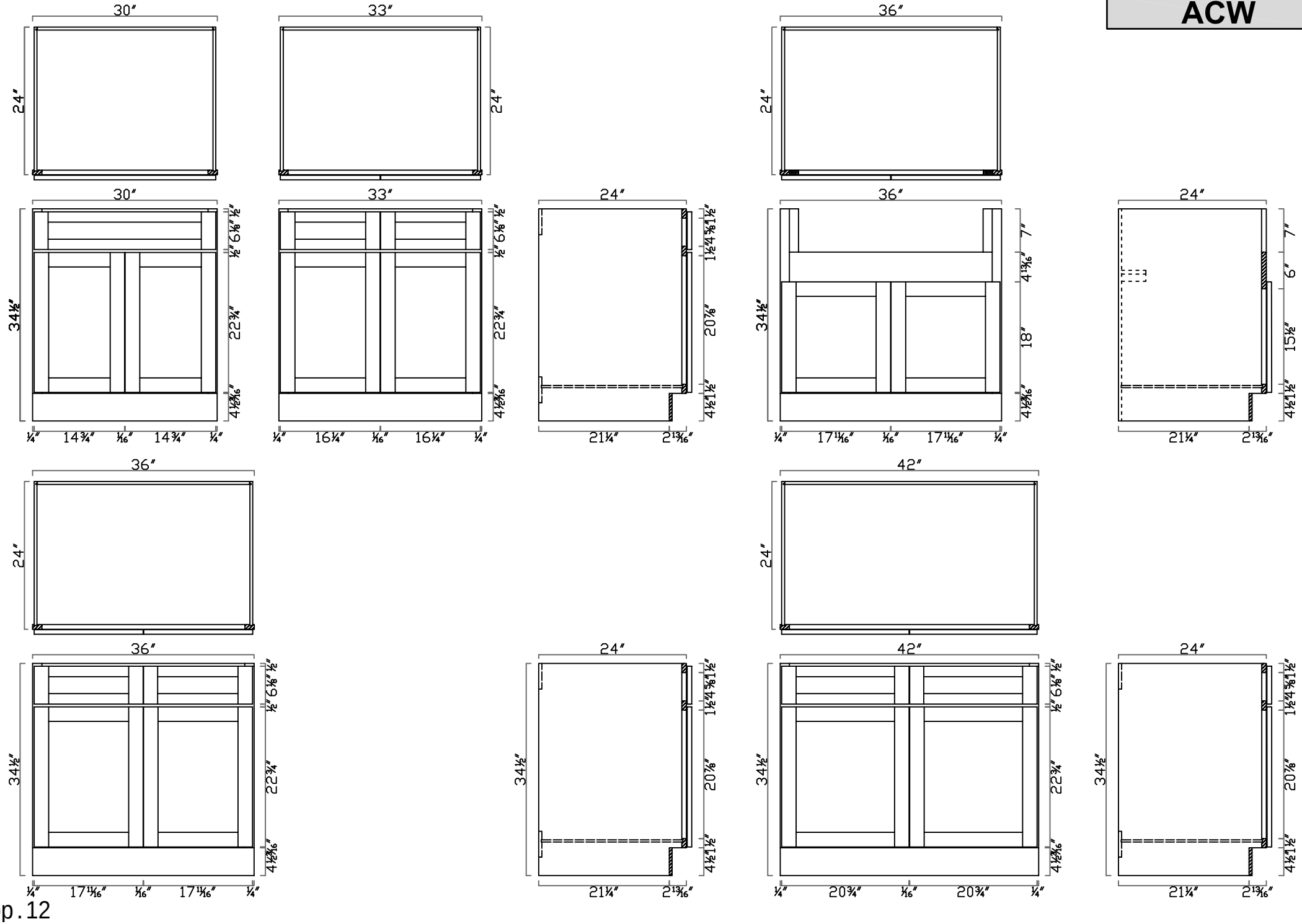

SB60		WP1884	WP2484
UCB1854	UCB2454		

GHI Cabinetry

ACW

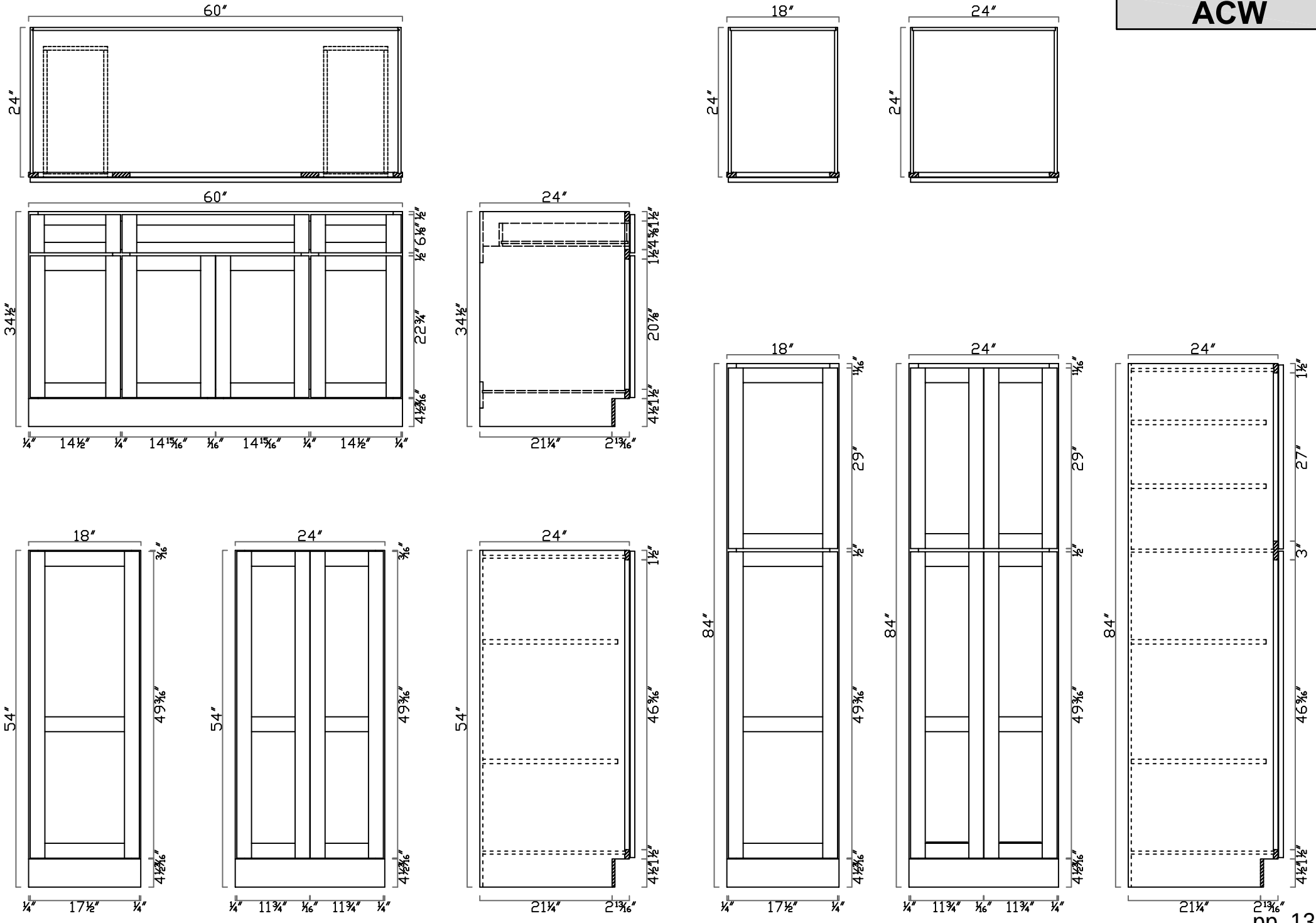

0U332484

0U332490

GHI Cabinetry

ACW

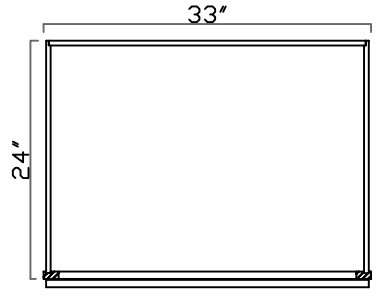

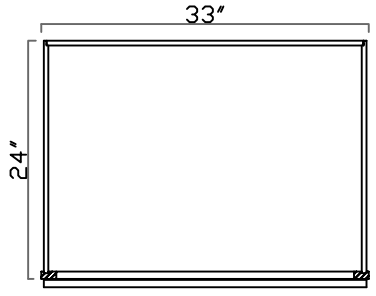

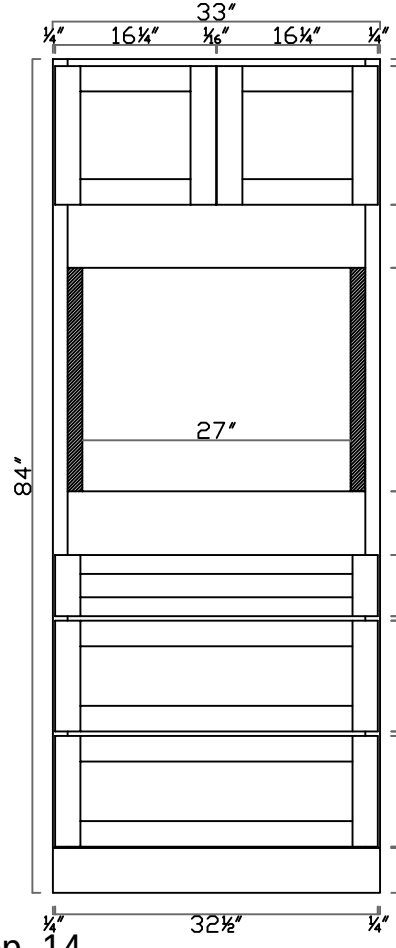

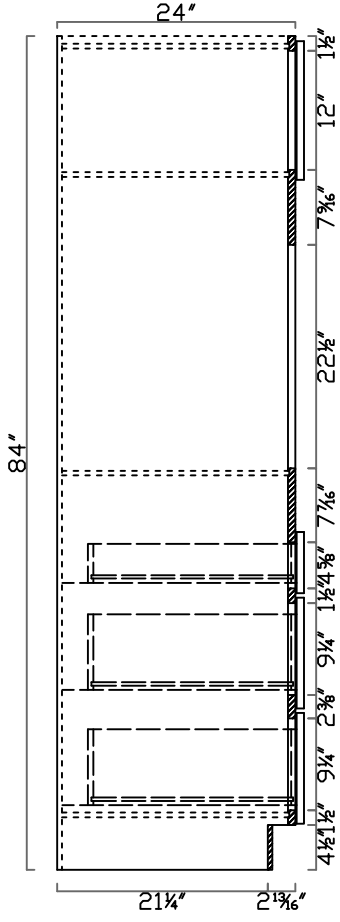

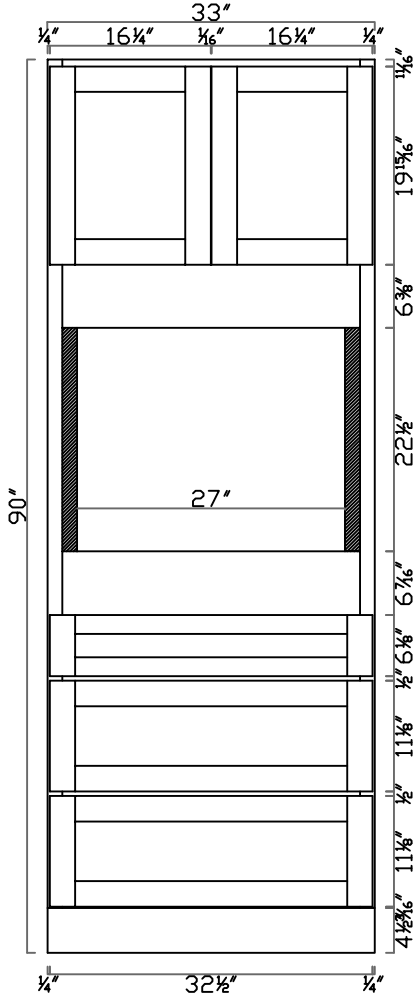

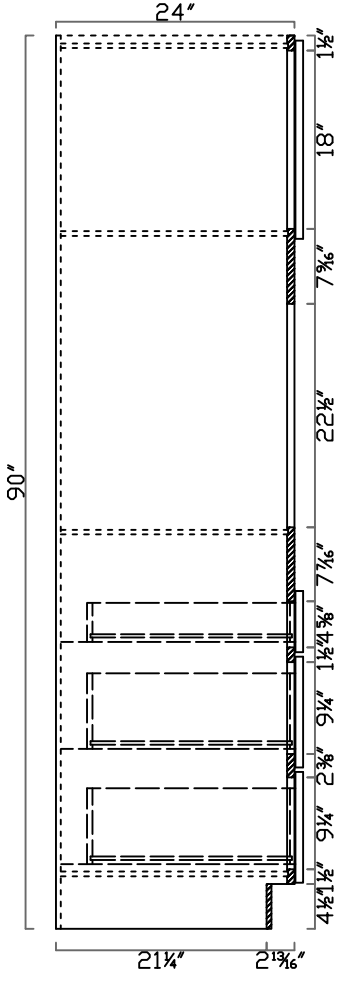

V2421	V3021D	V3621D(L)
VDB1221	V3621D	V4821D

GHI Cabinetry

ACW

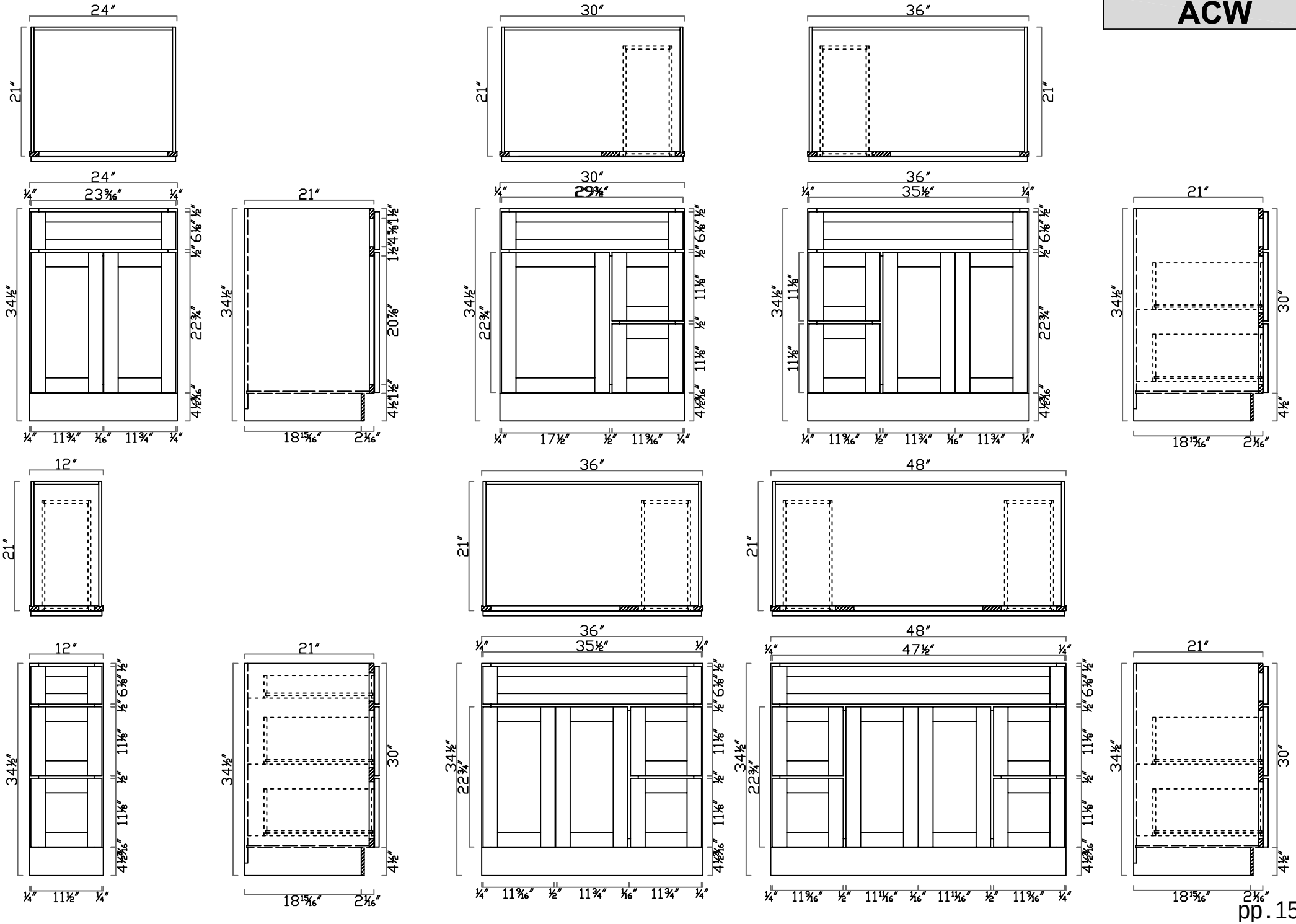

V6021D	SM3030	SM3630
BV2126	L781821	

GHI Cabinetry

ACW

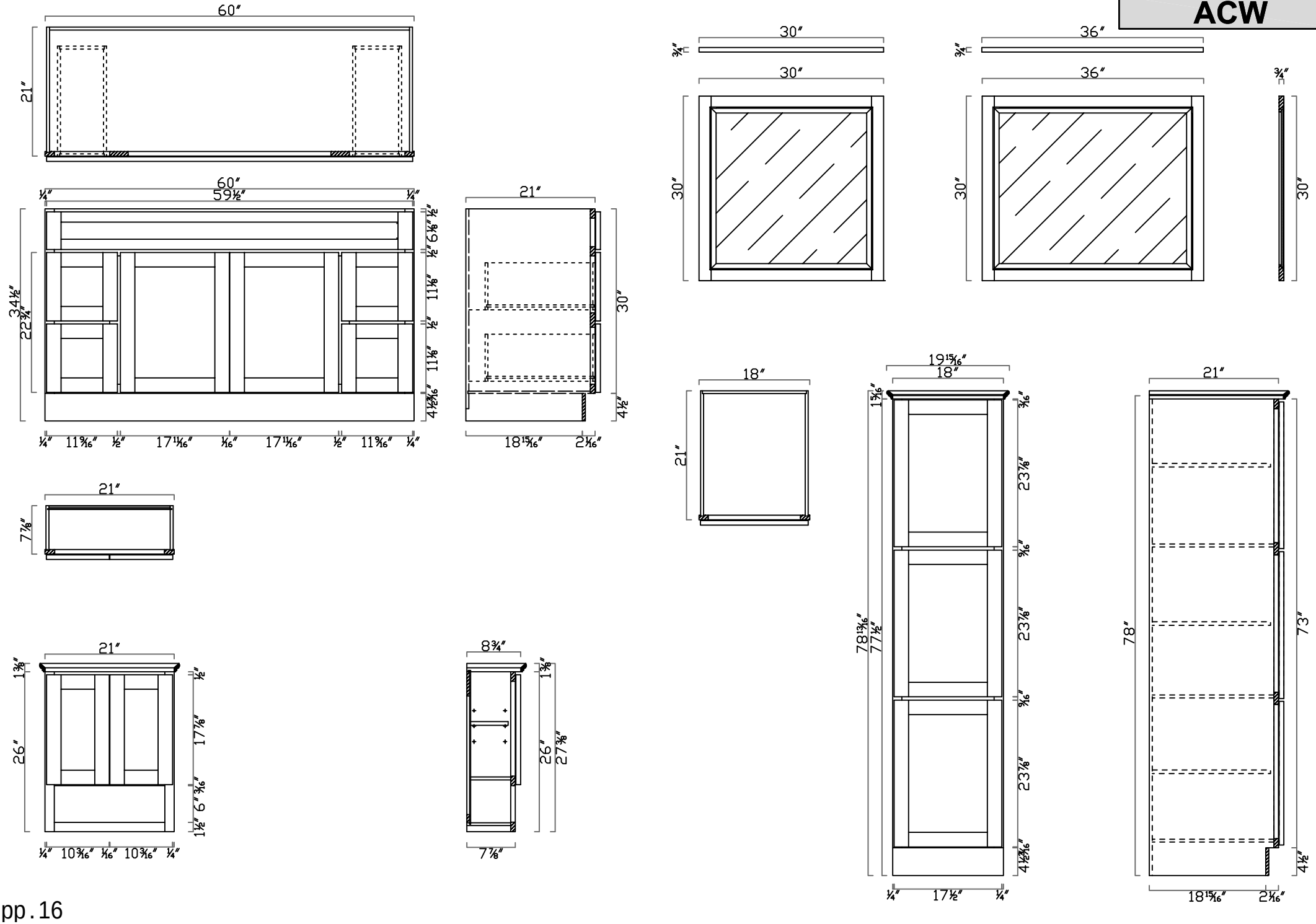

W0930	W1230	W1530	W1830	W2130	W2430
W0936	W1236	W1536	W1836	W2136	W2436
W0942	W1242	W1542	W1842	W2142	W2442

GHI Cabinetry

SHG PCG MJS

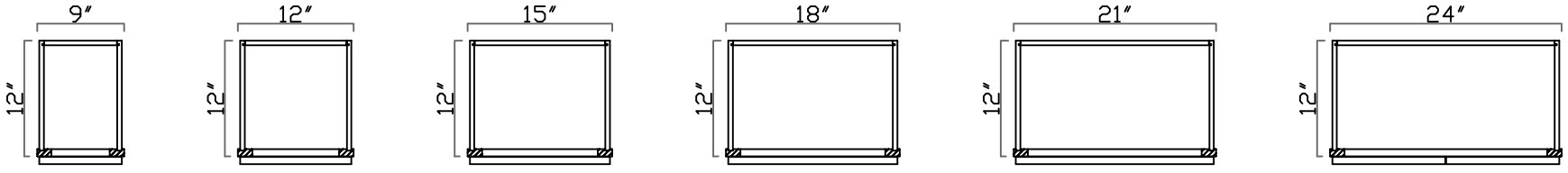

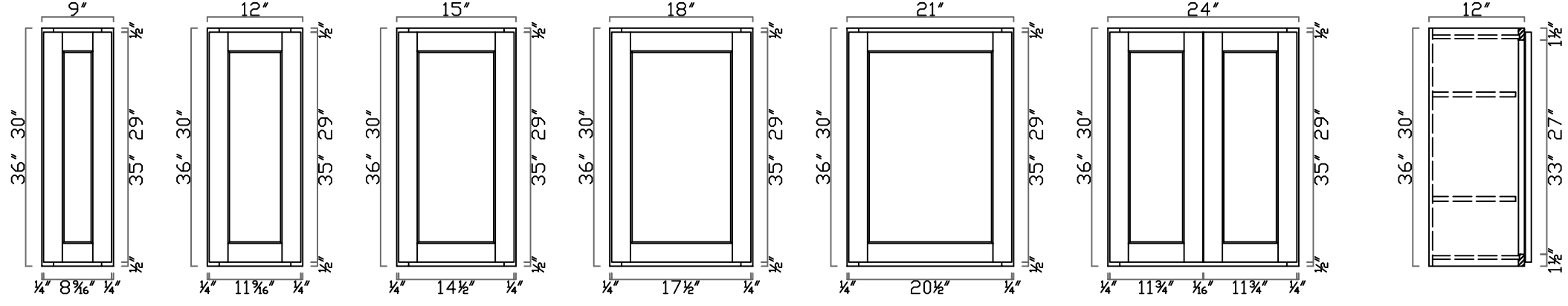

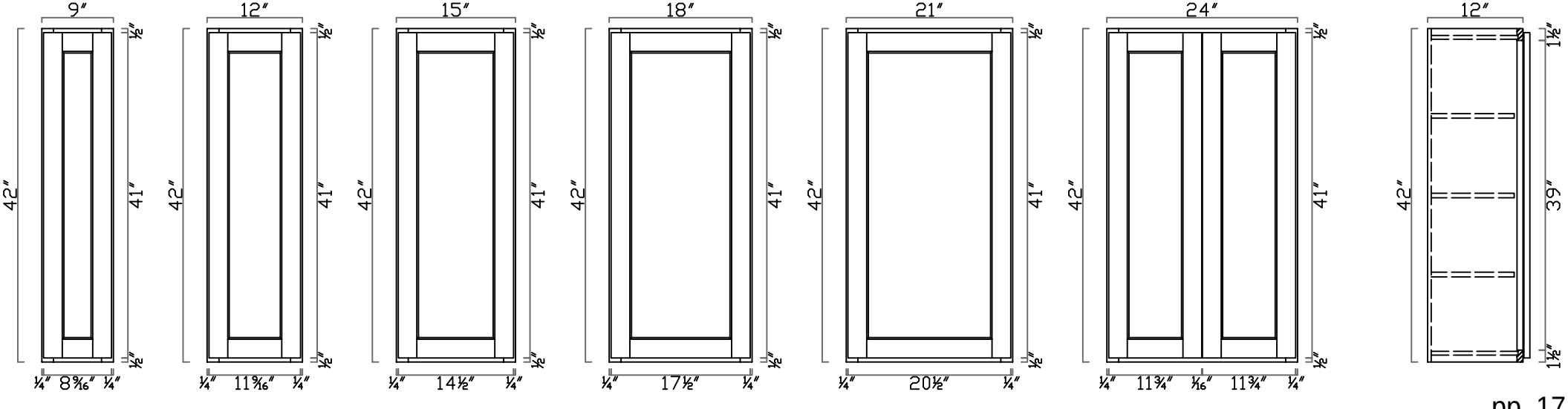

W2730	W3030	W3330	W3630
W2736	W3036	W3336	W3636
W2742	W3042	W3342	W3642

GHI Cabinetry

SHG PCG MJS

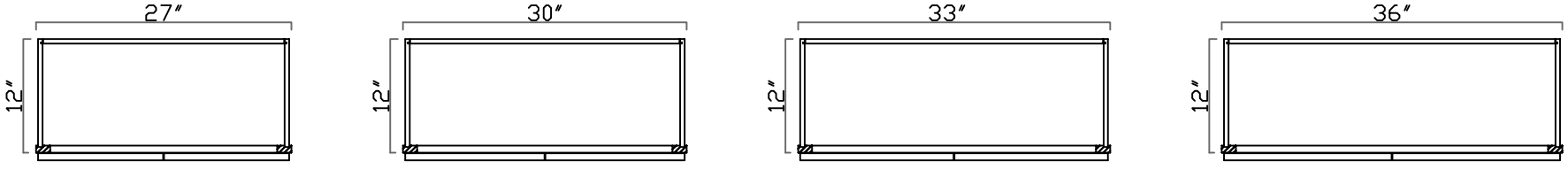

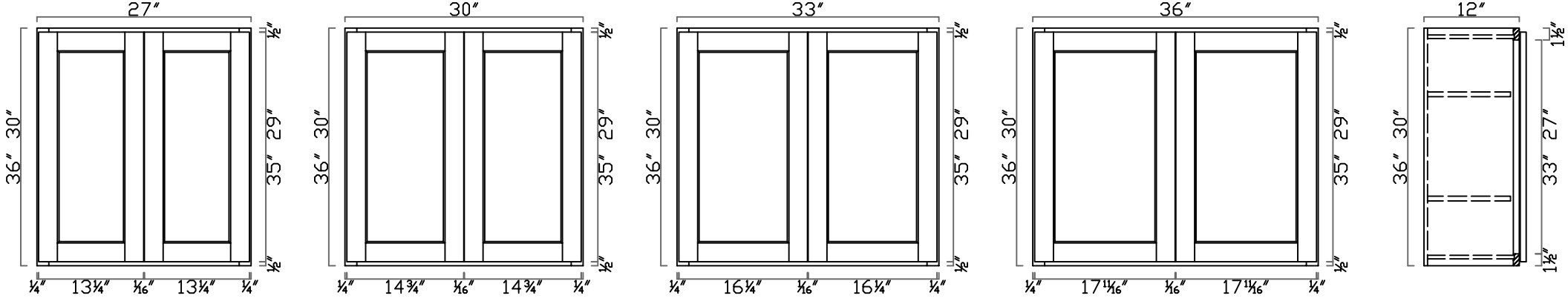

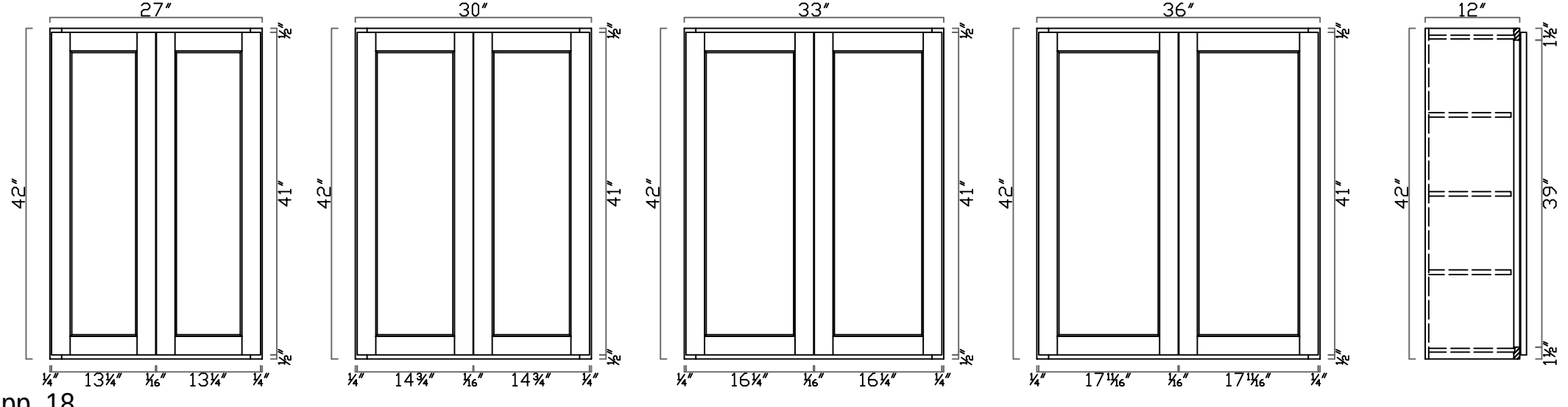

WAC2430	WBC2730	WDC2430
WAC2436		WDC2436
WAC2442		WDC2442

GHI Cabinetry

SHG PCG MJS

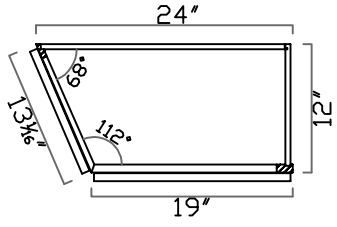

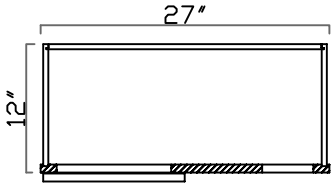

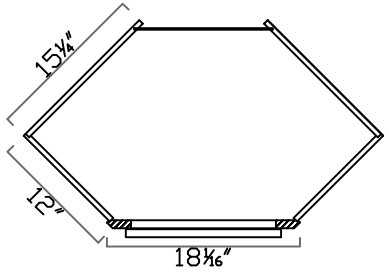

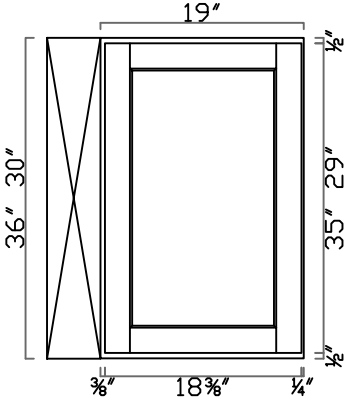

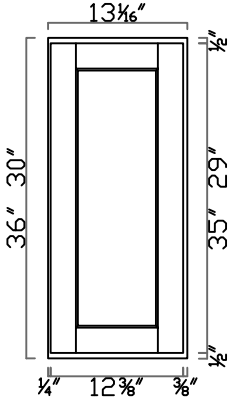

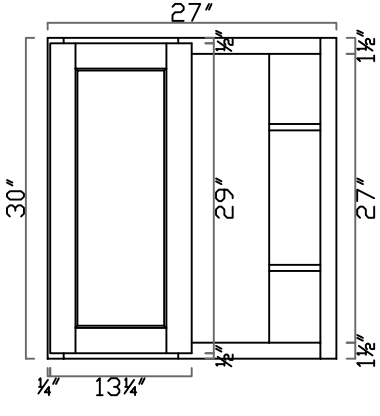

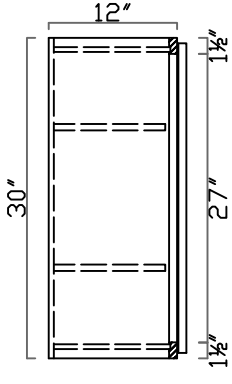

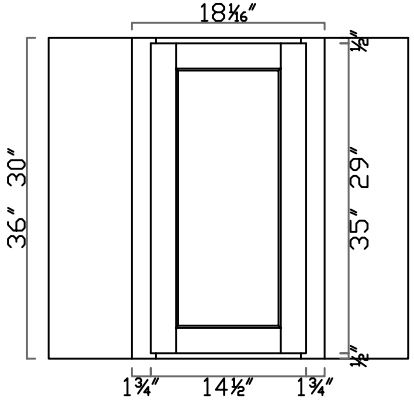

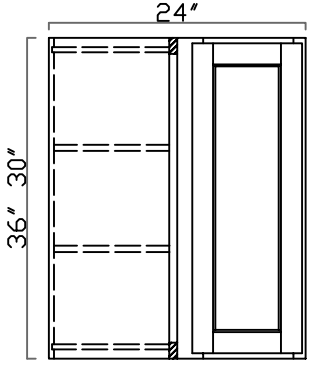

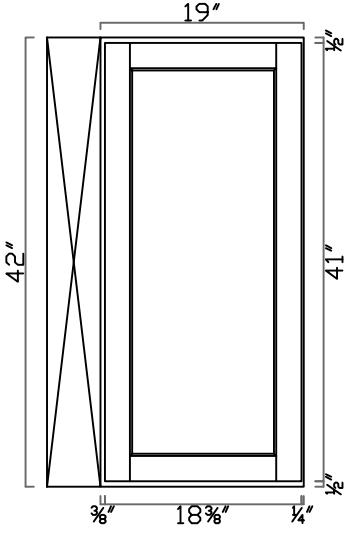

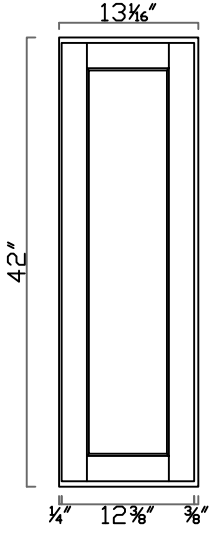

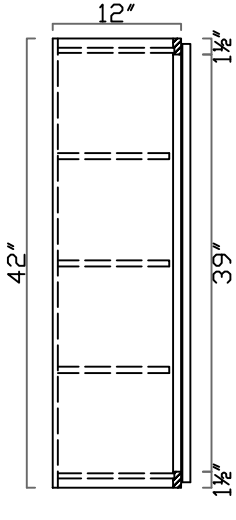

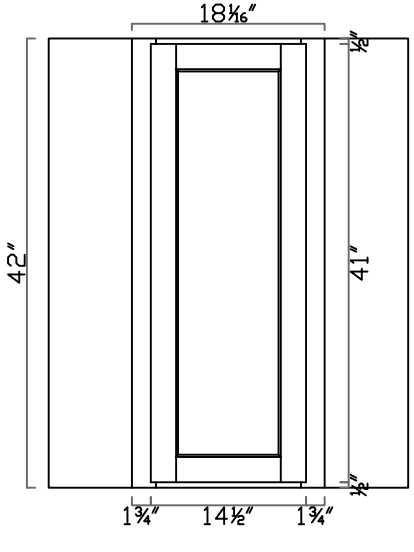

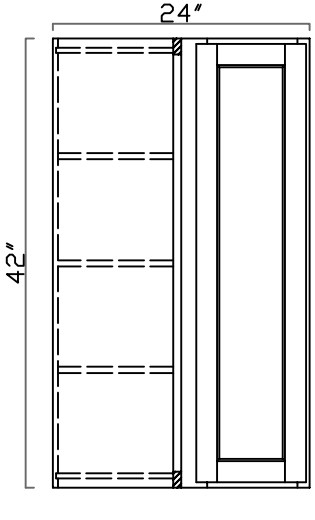

WDC2736	W3012	W3015	W3612	W3615
WDC2742	W3018	W3024	W3618	W3624

GHI Cabinetry

SHG PCG MJS

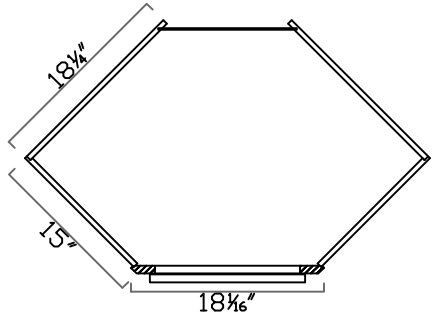

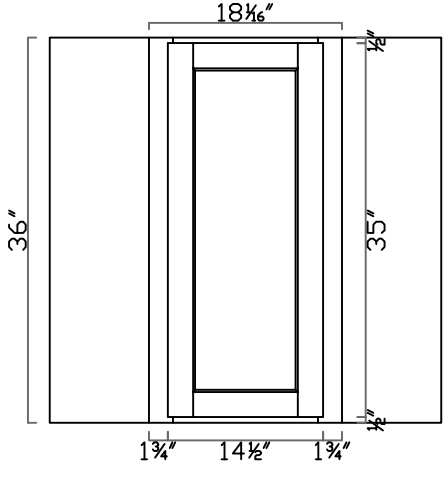

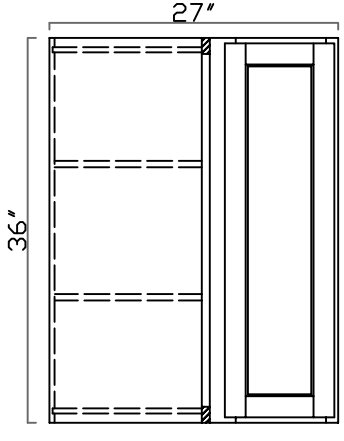

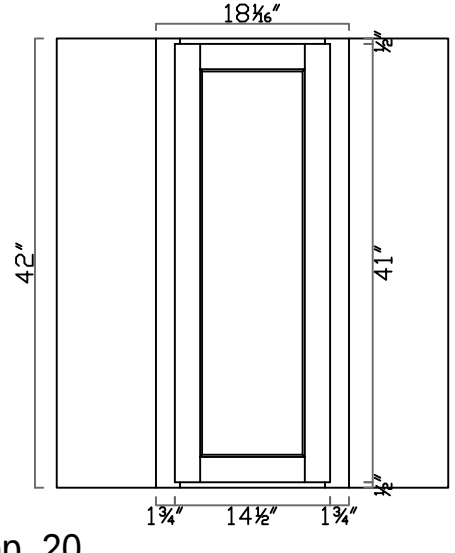

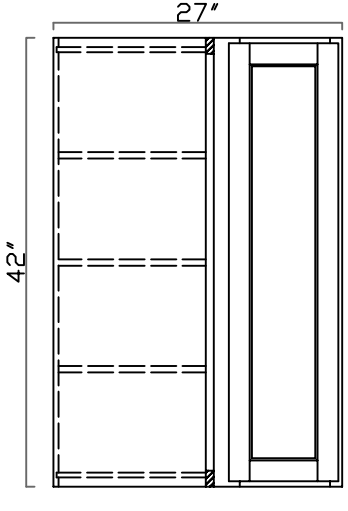

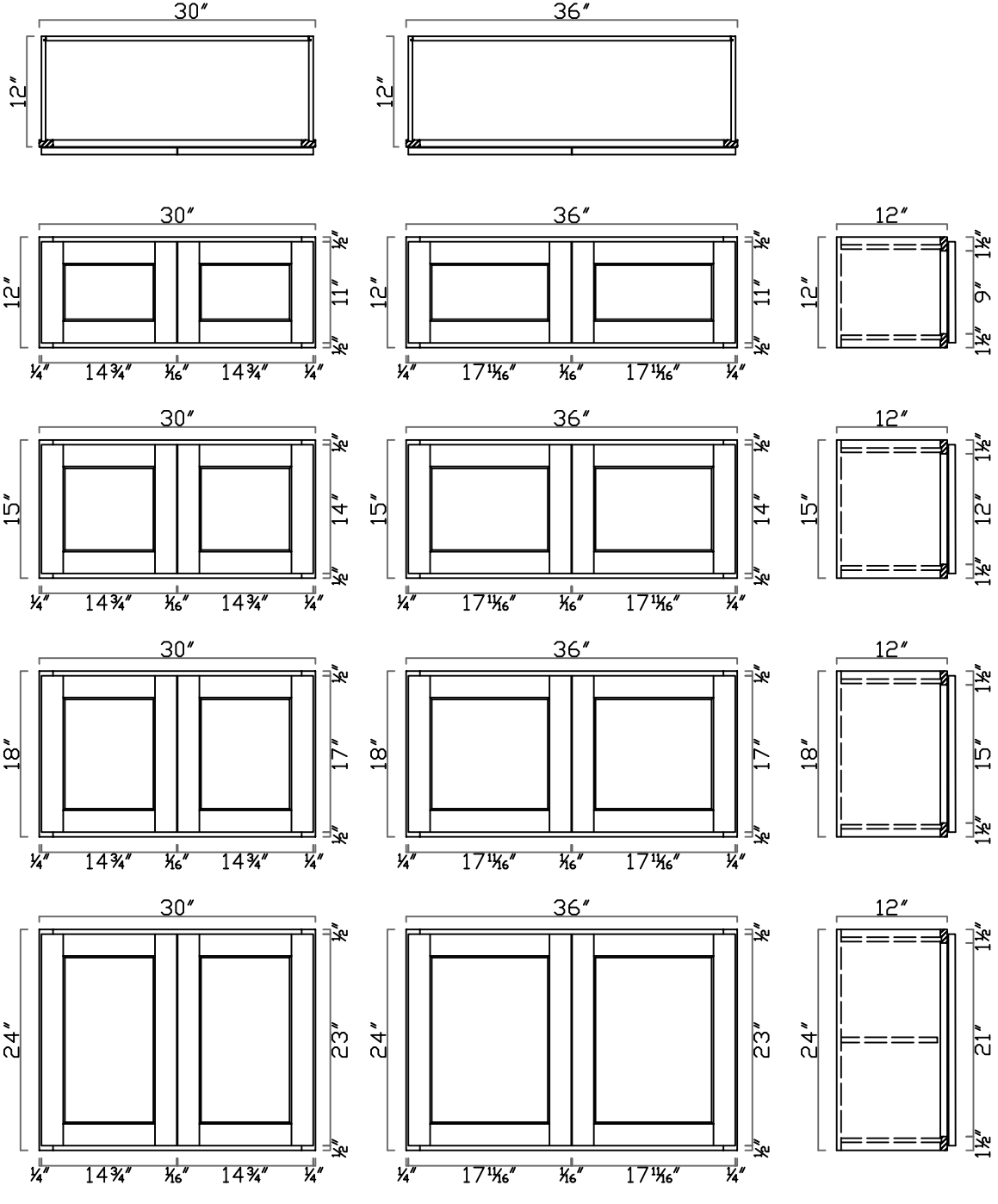

W2415	W3315	W183624	W243624
W331224	W361224	W184224	W244224
W331524	W361524		

GHI Cabinetry

SHG PCG MJS

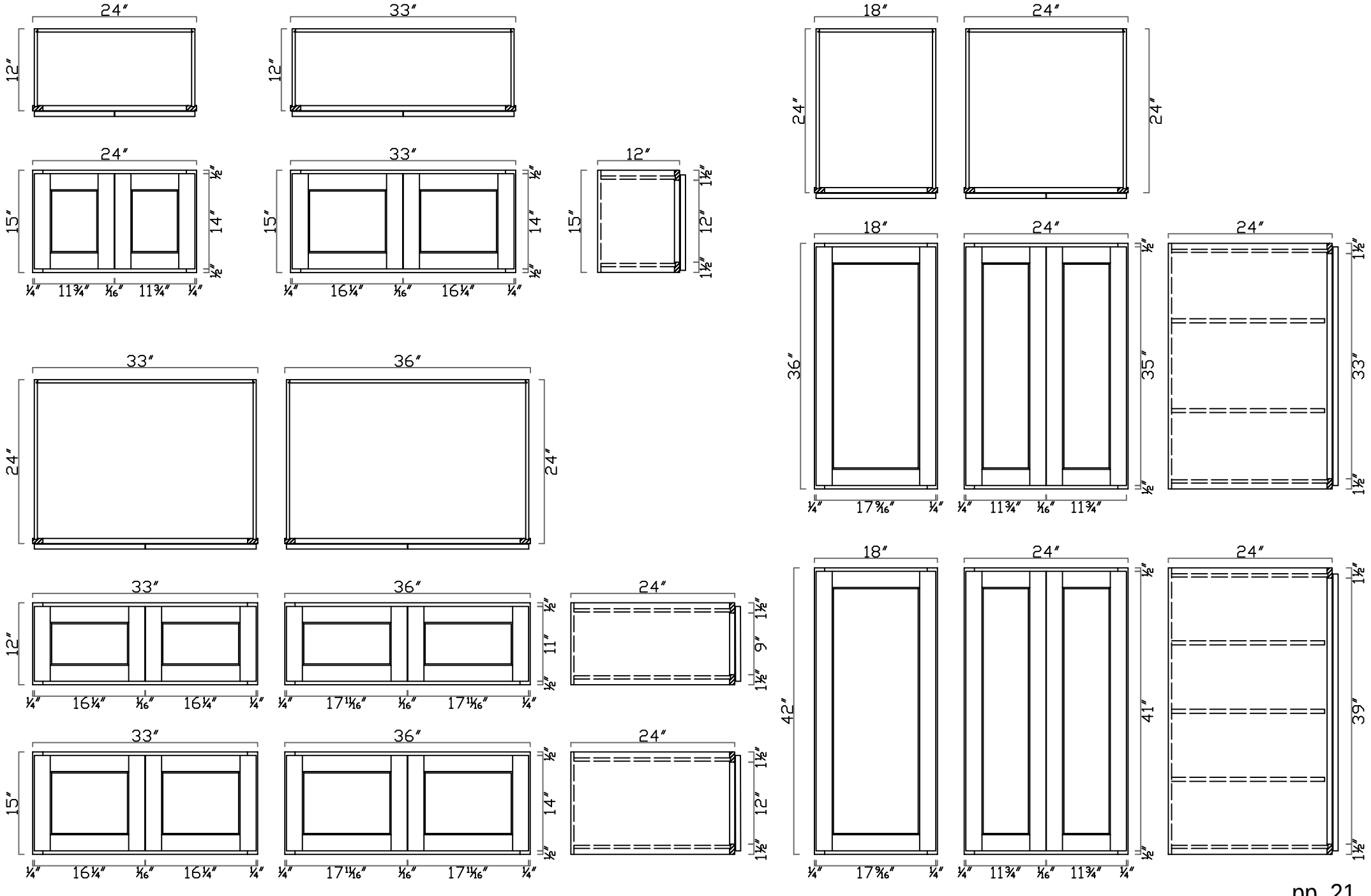

W361824		MC3018	
W332424	W362424	RP3015	WR3015
		WR1818	

GHI Cabinetry

SHG PCG MJS

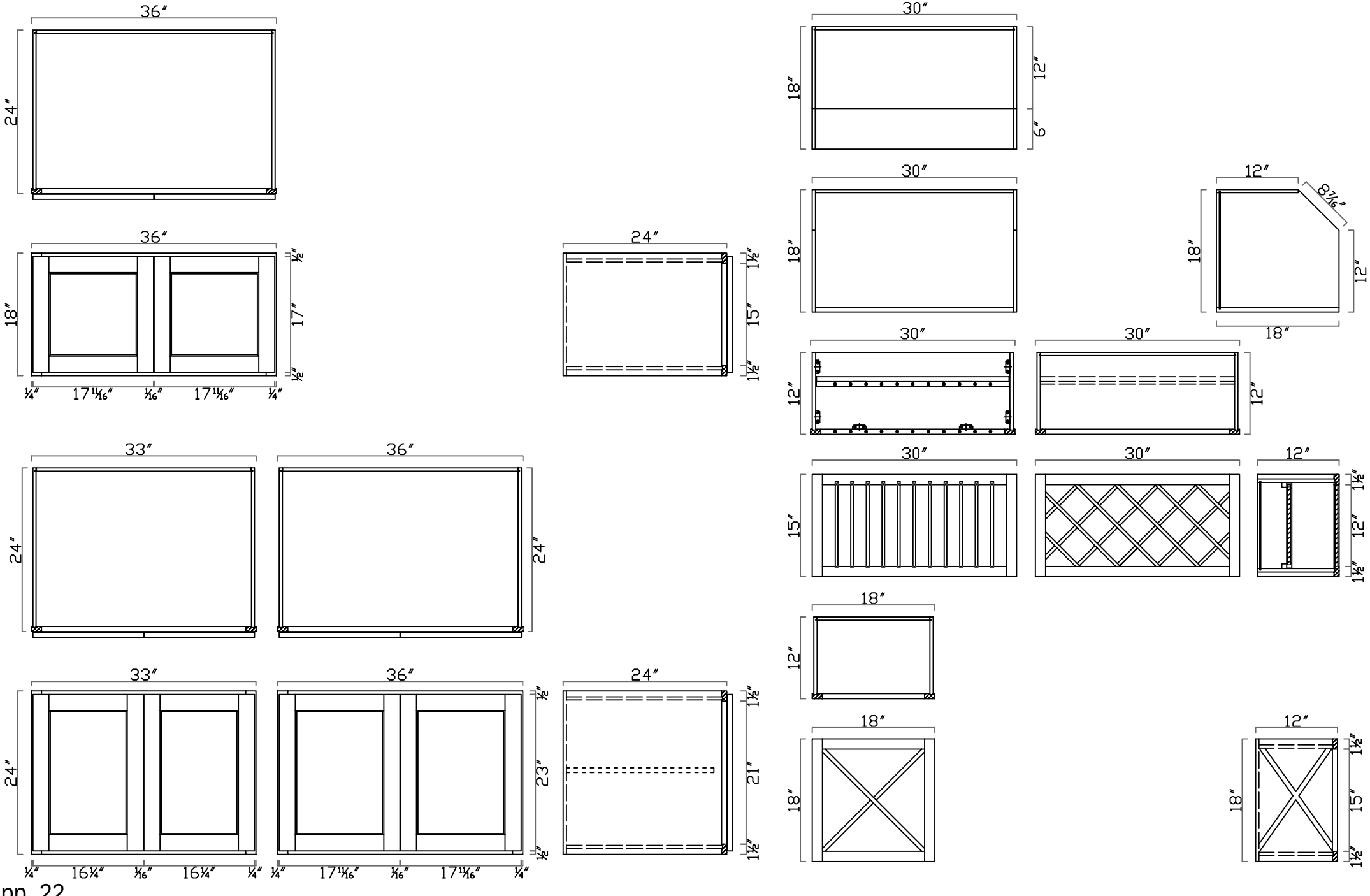

B09 (FH)	B18 (FH)	B18	B21
B12	B15	B24	B27

GHI Cabinetry

SHG PCG MJS

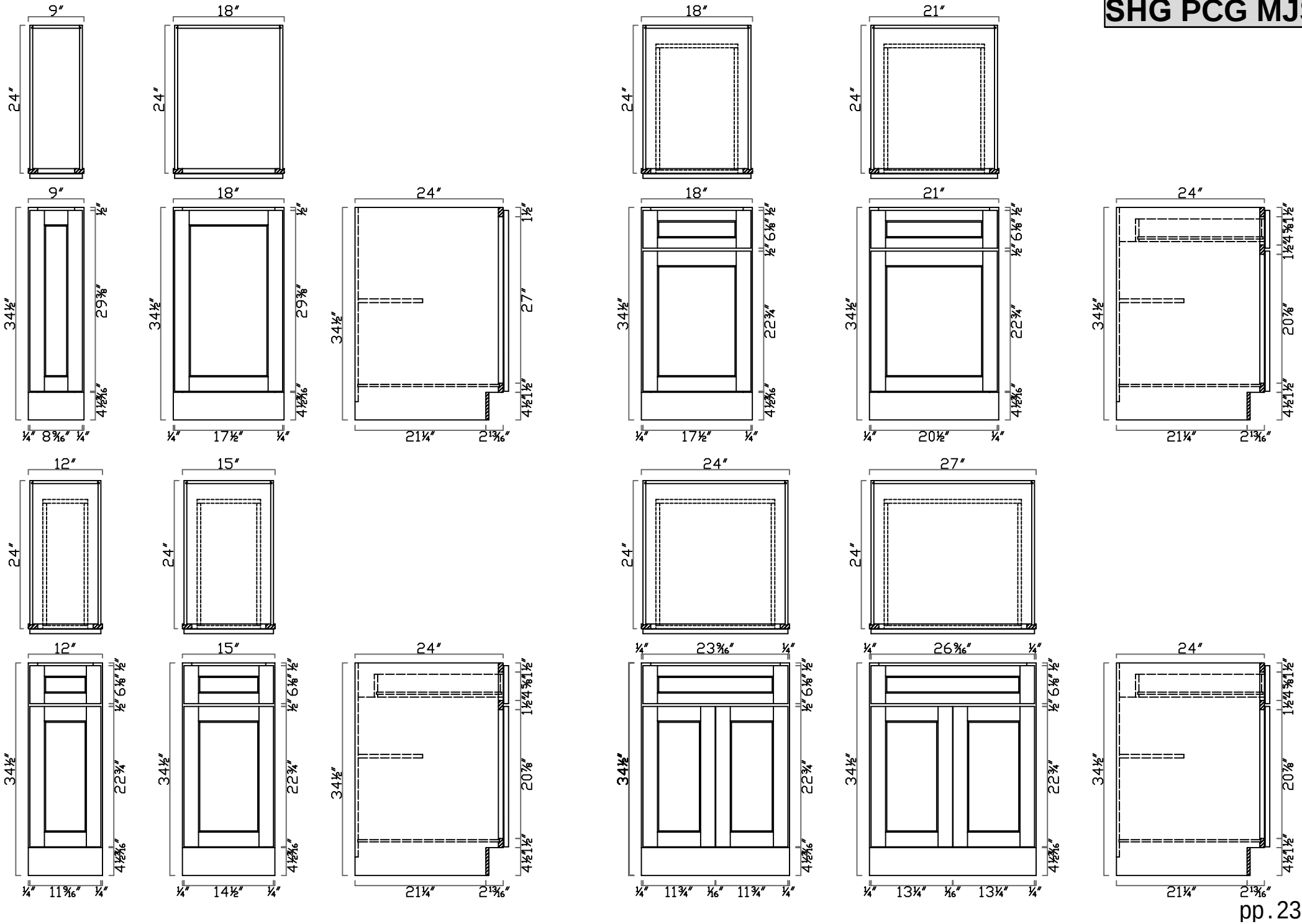

B30	B33	MB30
B36		BBC42-45

GHI Cabinetry

SHG PCG MJS

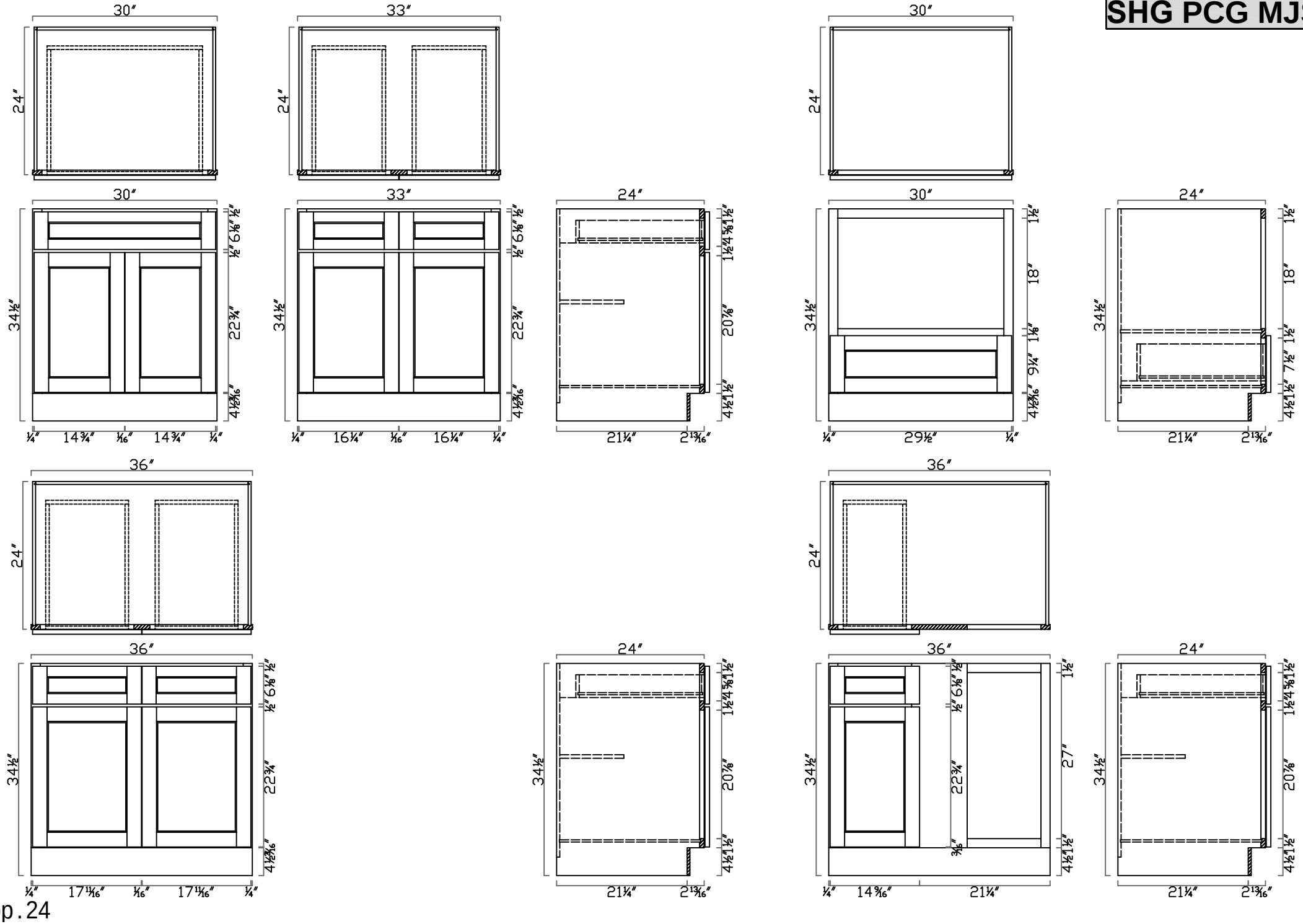

DB15	DB18	DB30
DB21	DB24	DB36

GHI Cabinetry

SHG PCG MJS

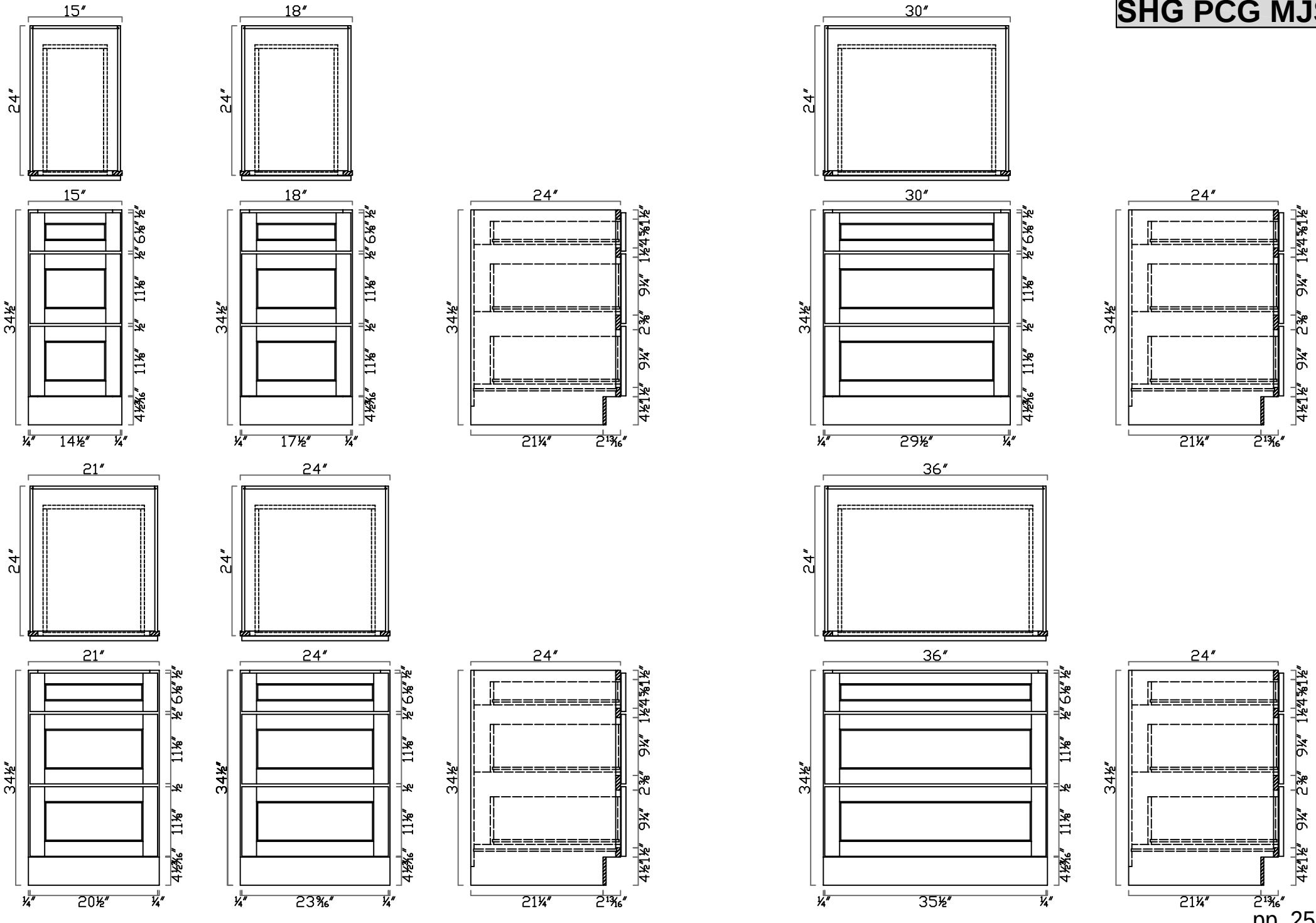

DB24-2	DB30-2	BC24
DCB3612		ER3309

GHI Cabinetry

SHG PCG MJS

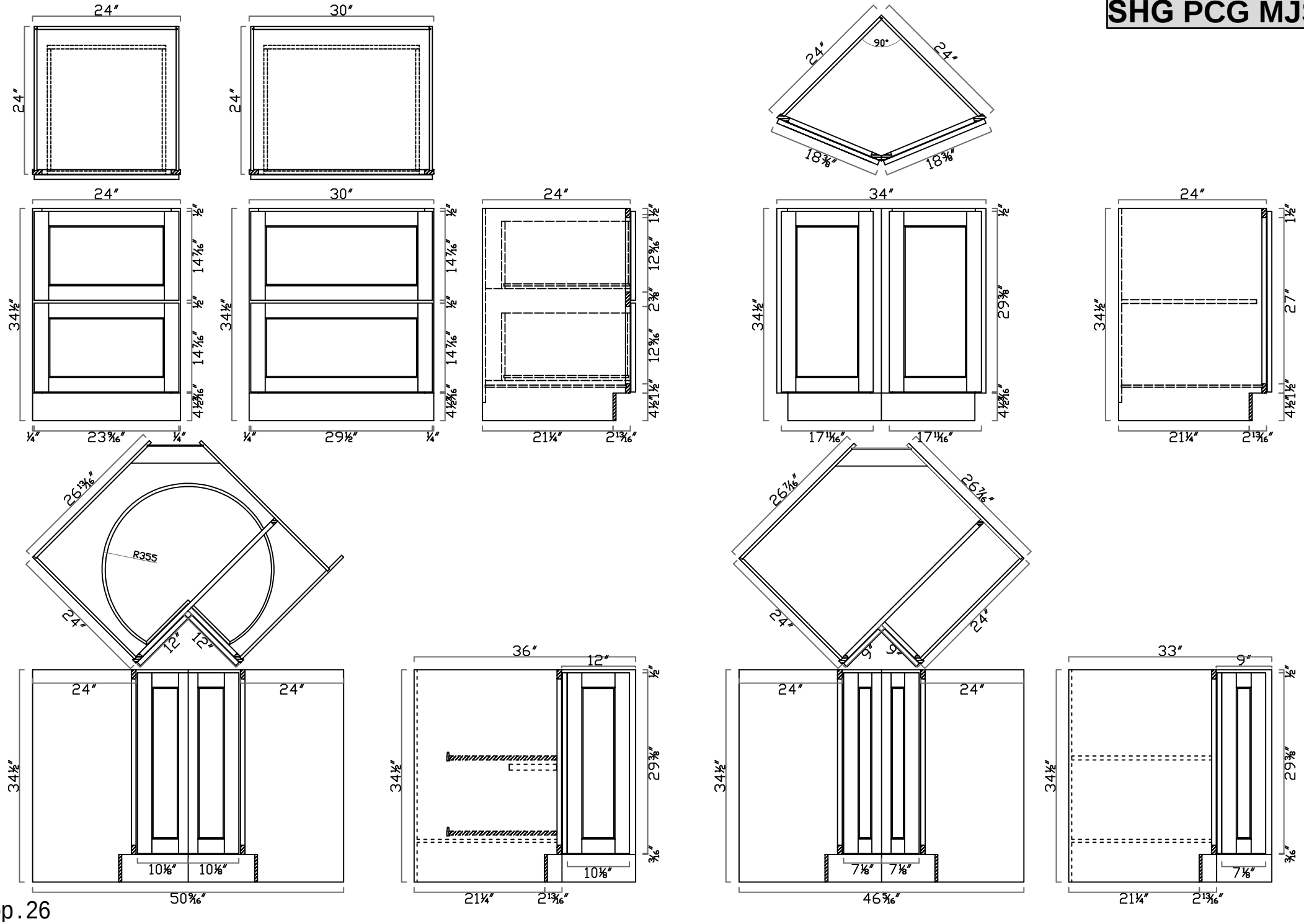

SB30	SB33	FSB36
SB36		SB42

GHI Cabinetry

SHG PCG MJS

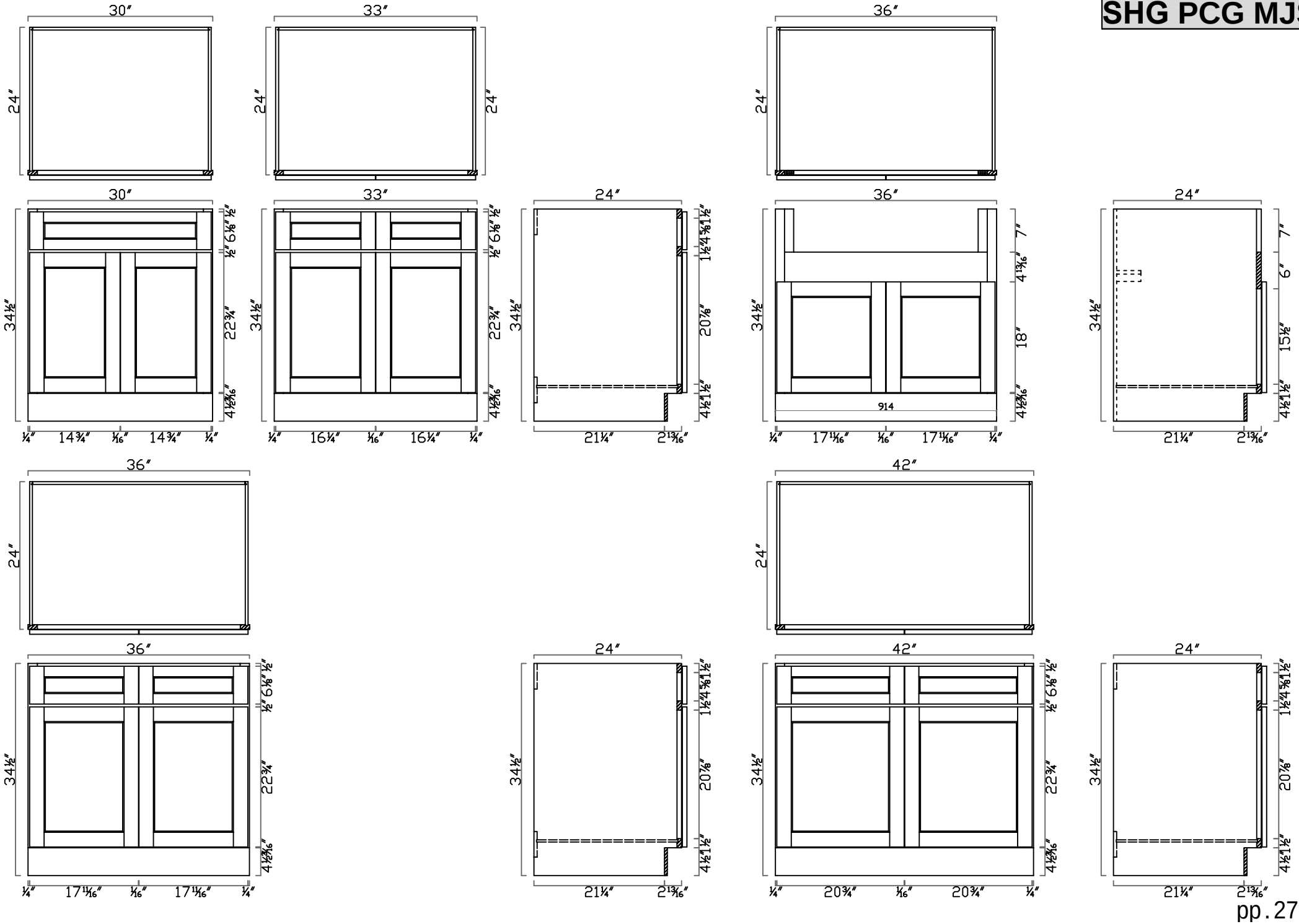

SB60		WP1884	WP2484
UCB1854	UCB2454		

GHI Cabinetry

SHG PCG MJS

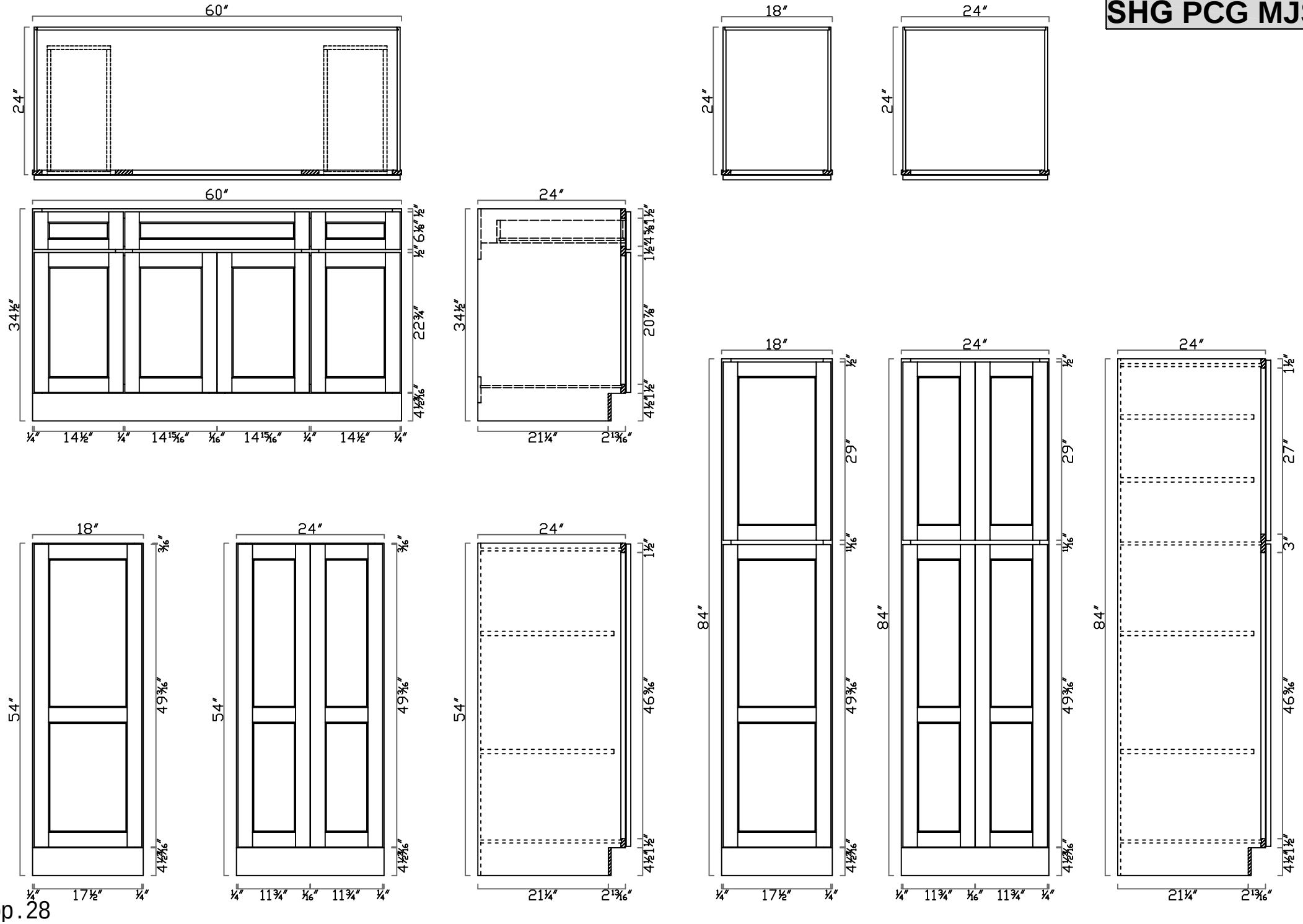

0U332484

0U332490

GHI Cabinetry

SHG PCG MJS

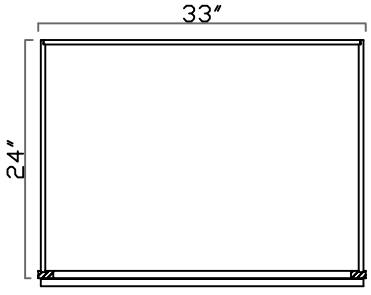

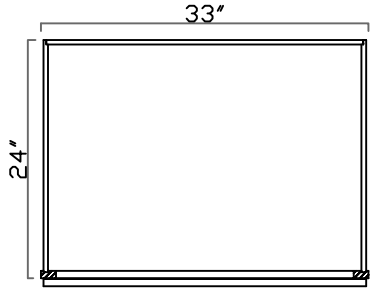

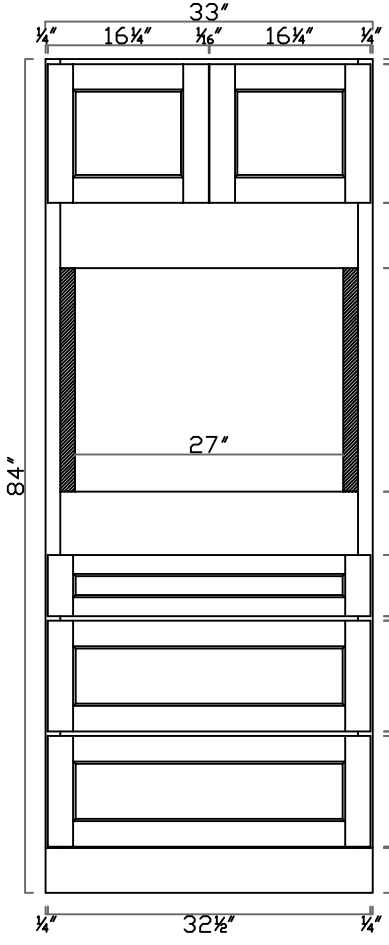

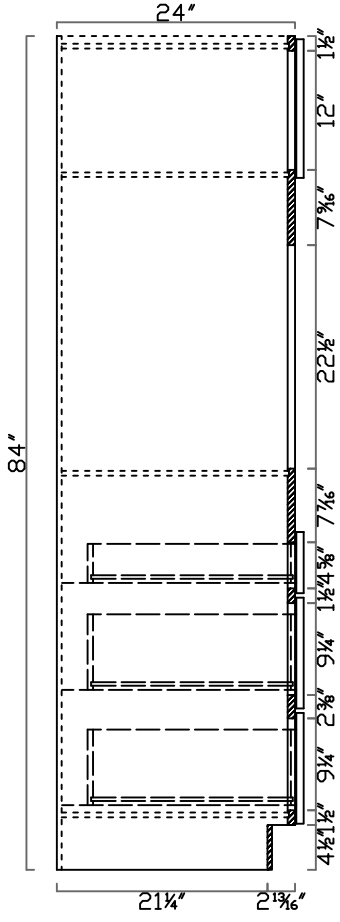

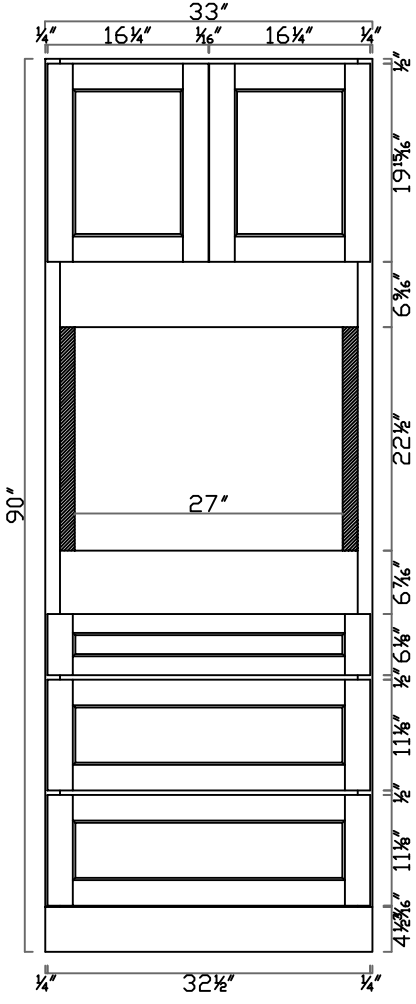

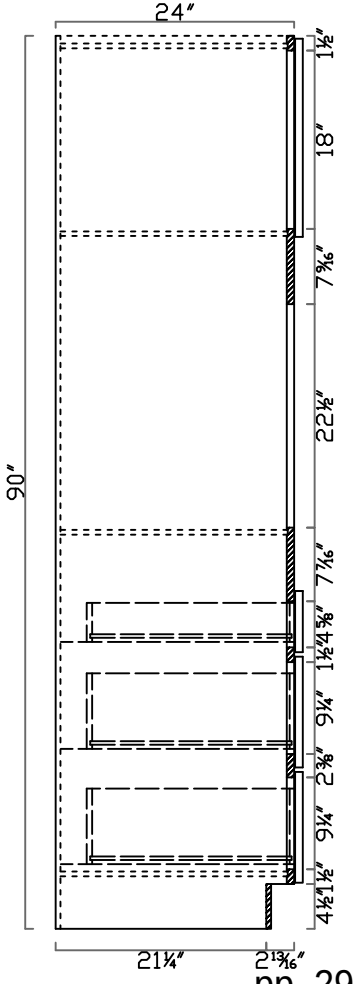

V2421	V3021D	V3621D (L)
VDB1221	V3621D	V4821D

GHI Cabinetry

SHG PCG MJS

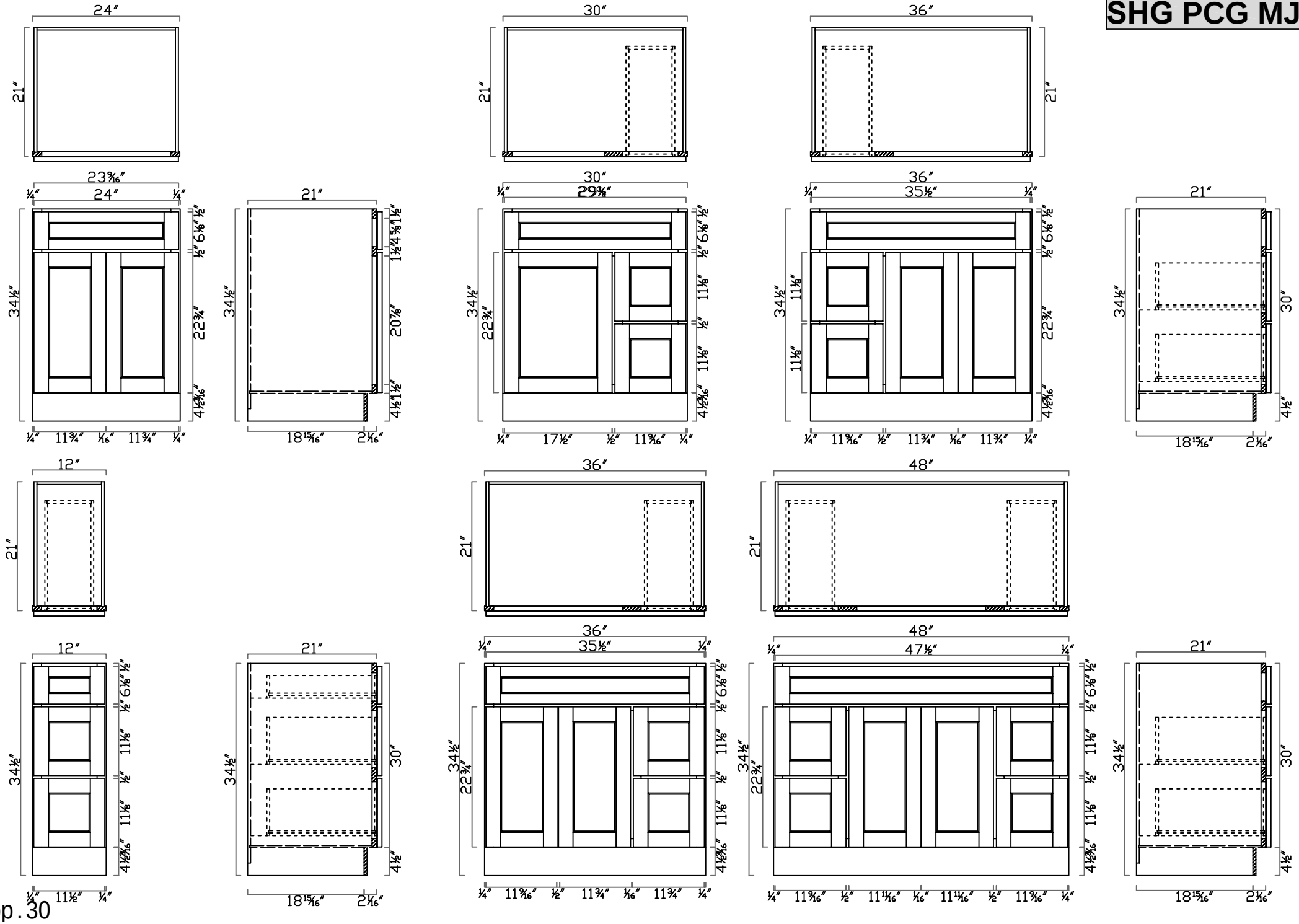

V6021D LB244L LB305L LB366L		M3030	M3630
TRV3030	TRV3630	BV2126	L781821

GHI Cabinetry

SHG PCG MJS

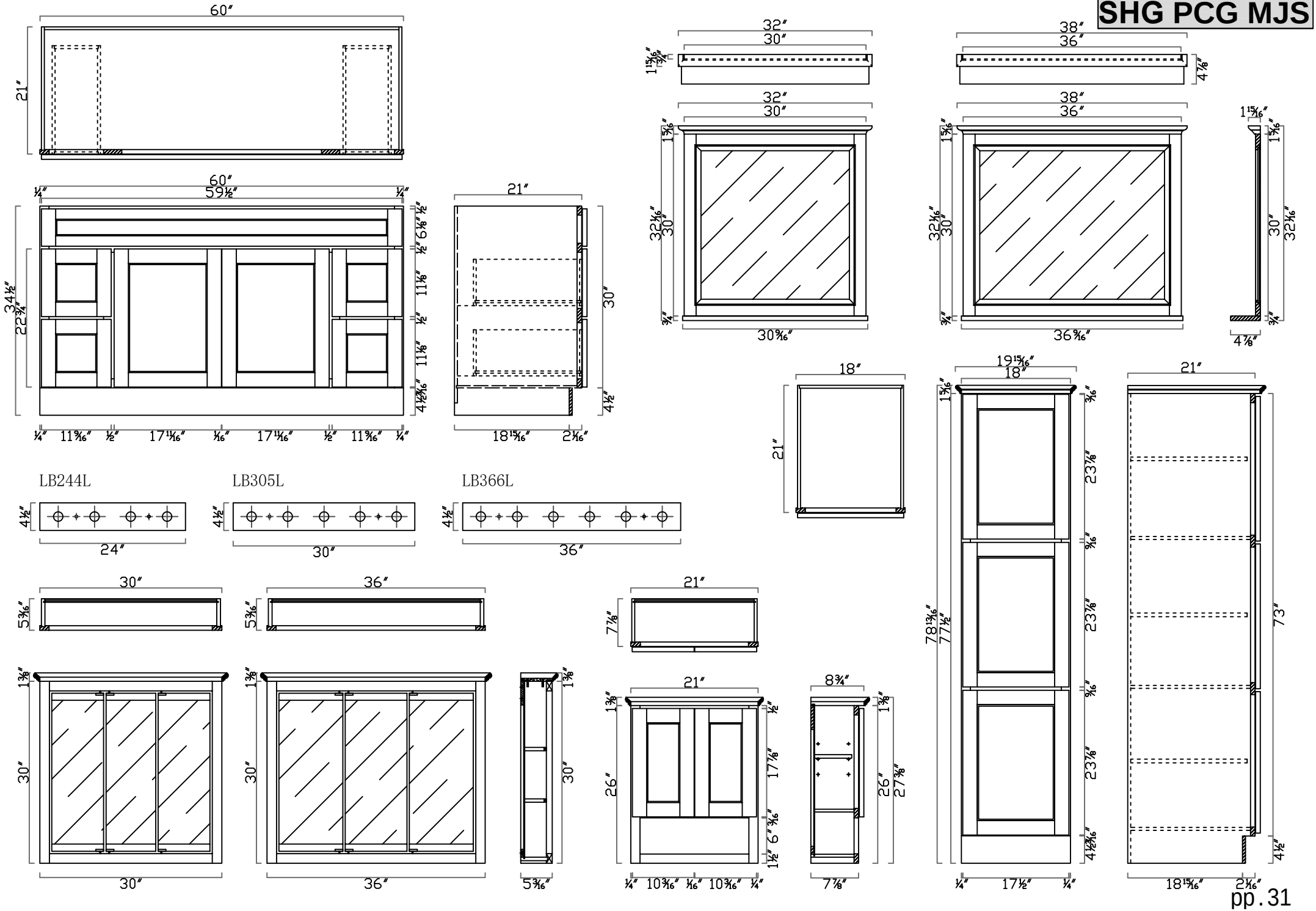

B09 (FH)		B21	B24
B12	B18	B27	B30

GHI Cabinetry

CCB

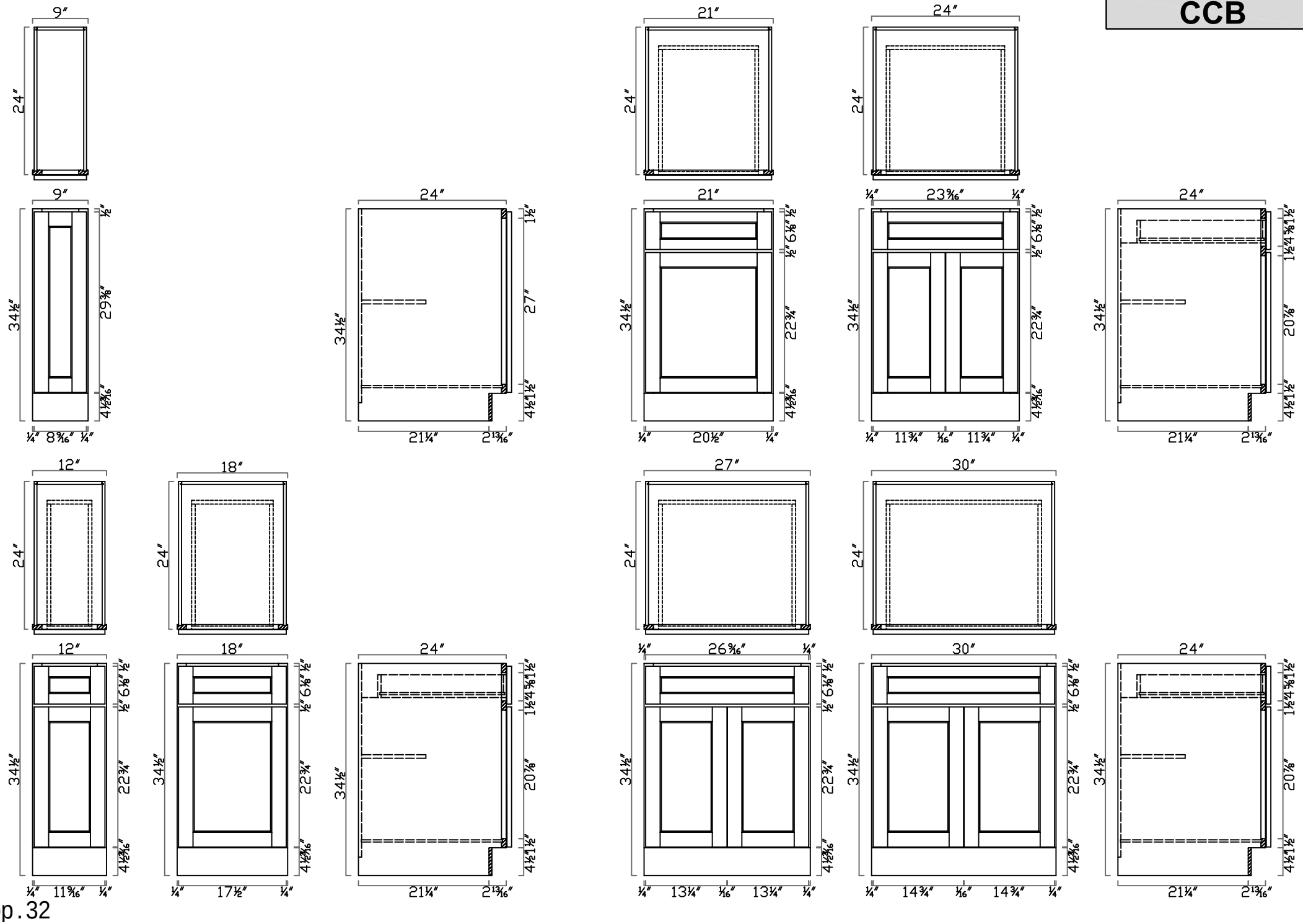

B36

ER3309

GHI Cabinetry

CCB

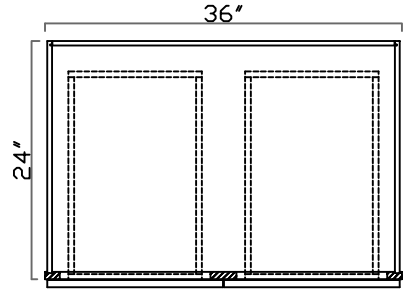

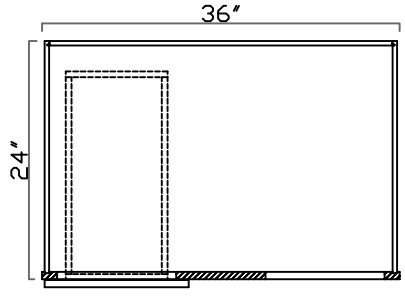

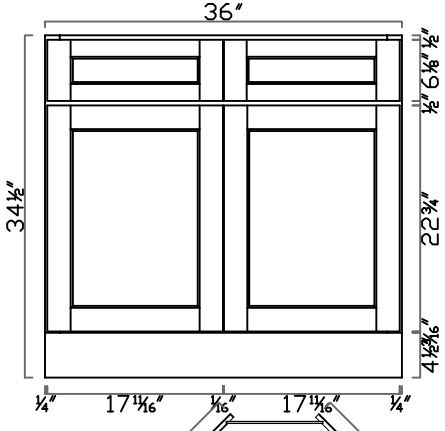

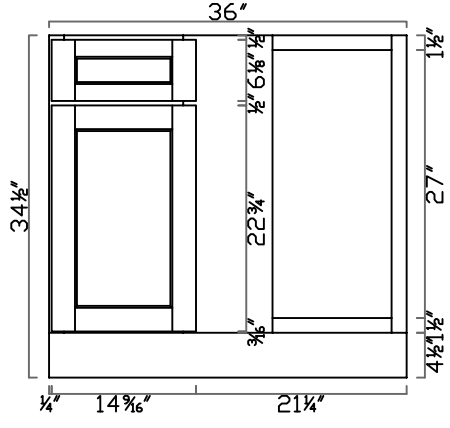

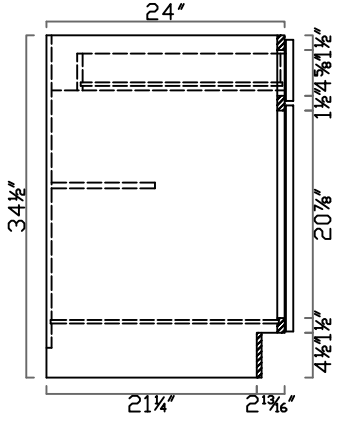

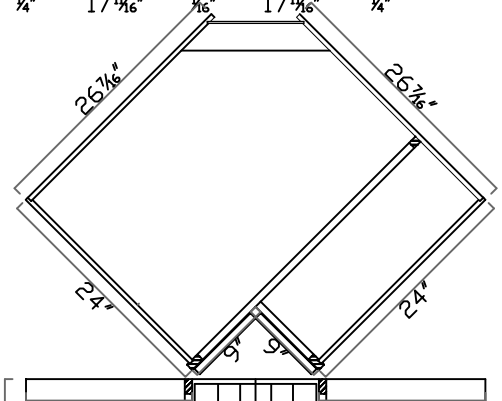

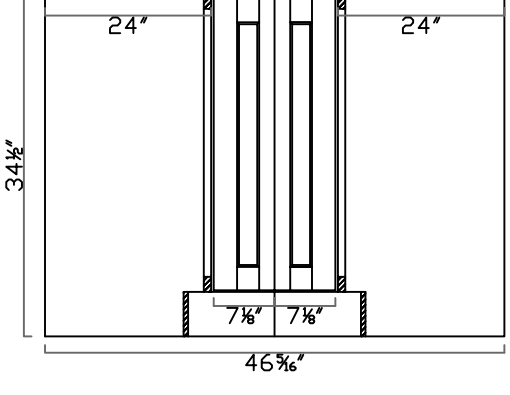

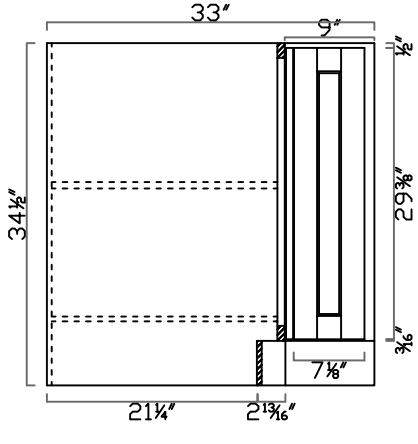

SB36	DB15	DB18
FSB36	DB24	DB30

GHI Cabinetry

CCB

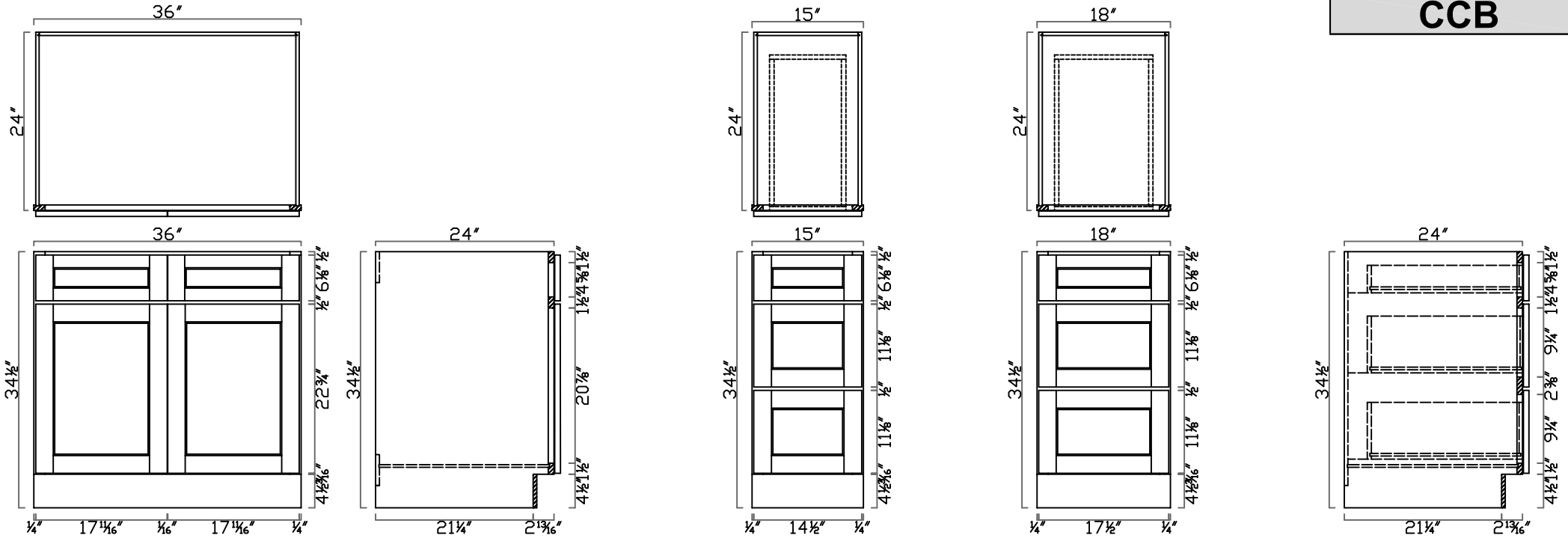

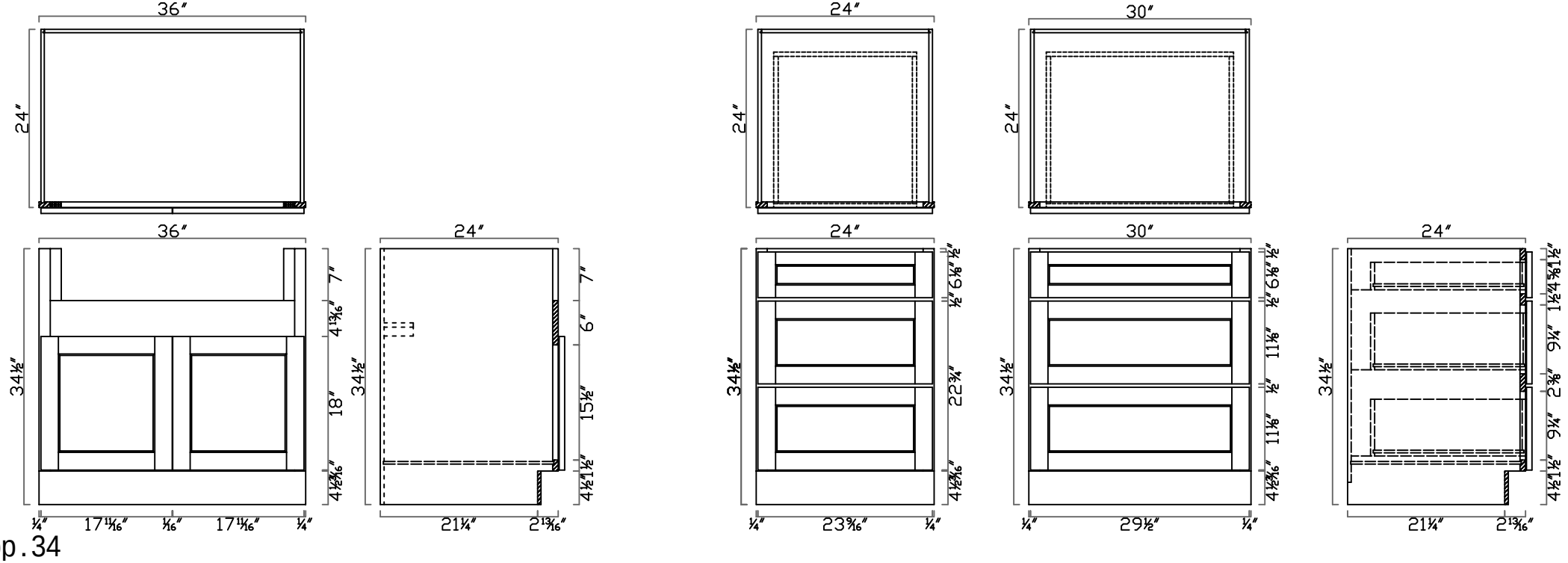

V2421	V3021D	V3621D(L)
VDB1221	V3621D	V4821D

GHI Cabinetry

CCB

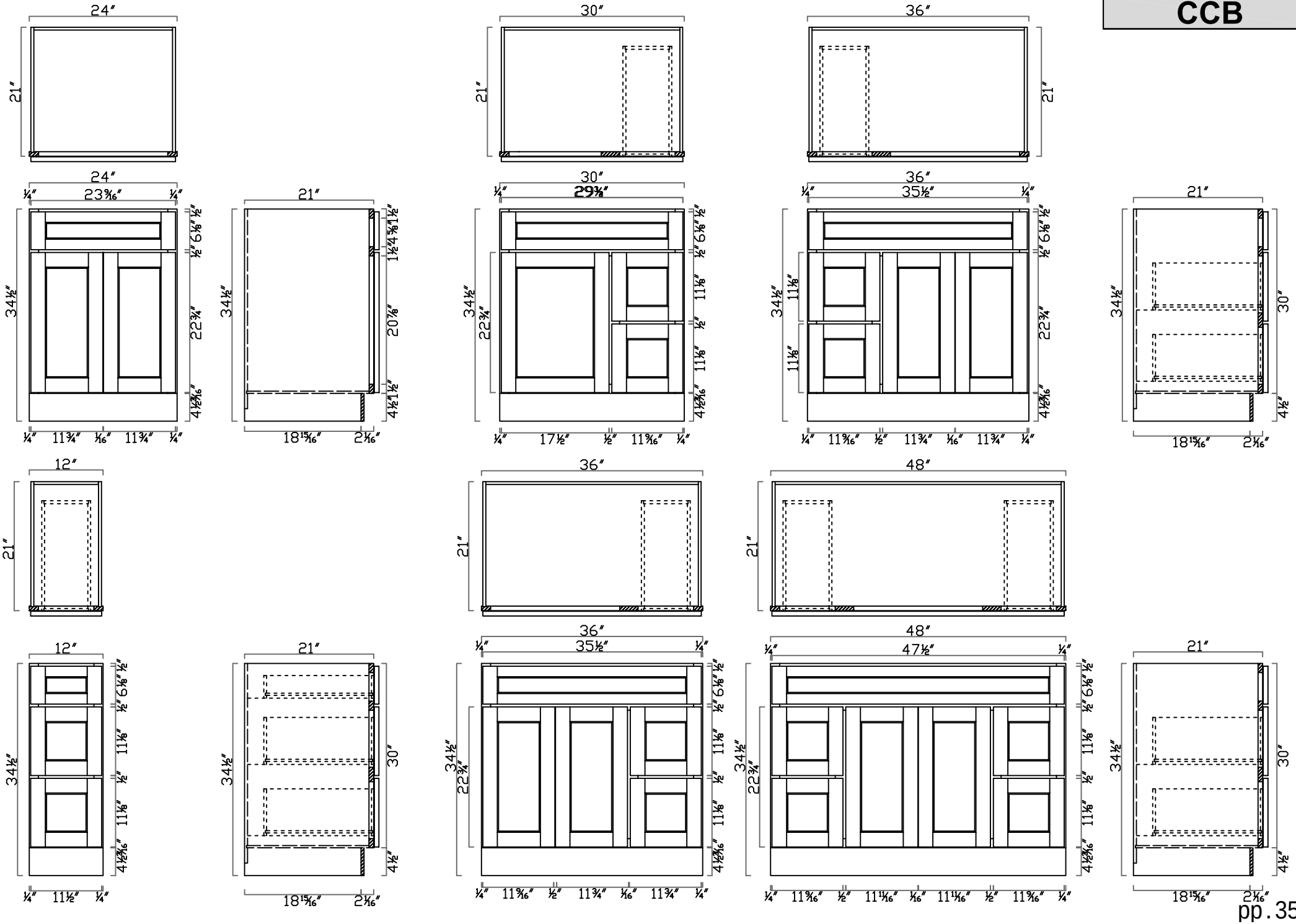

V6021D	M3030	M3630
BV2126	L781821	

GHI Cabinetry

CCB

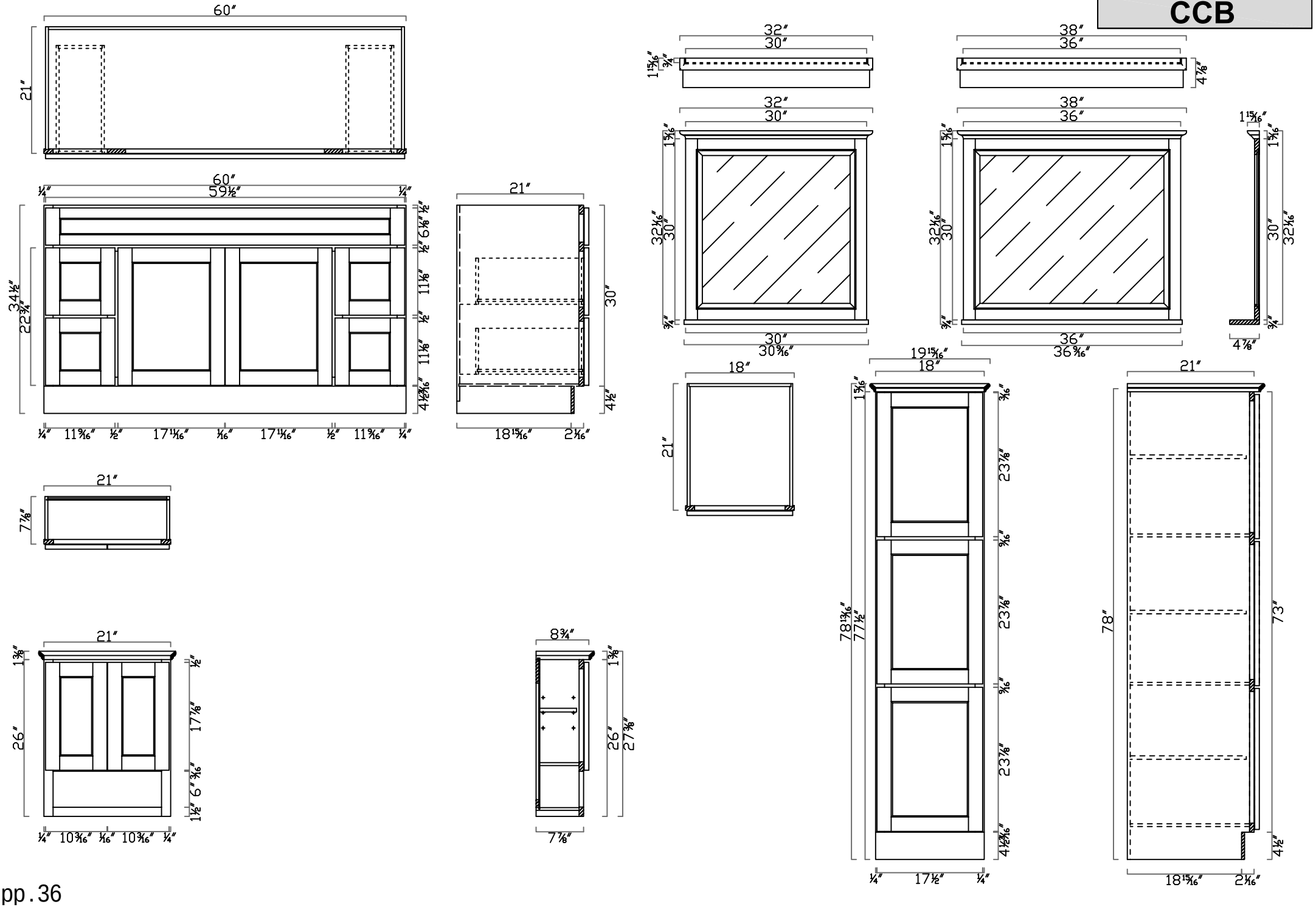

W0930	W1230	W1530	W1830	W2130	W2430
W0936	W1236	W1536	W1836	W2136	W2436
W0942	W1242	W1542	W1842	W2142	W2442

GHI Cabinetry

NTL

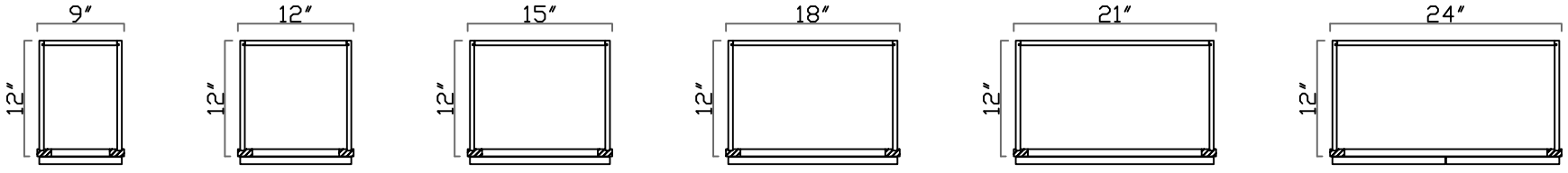

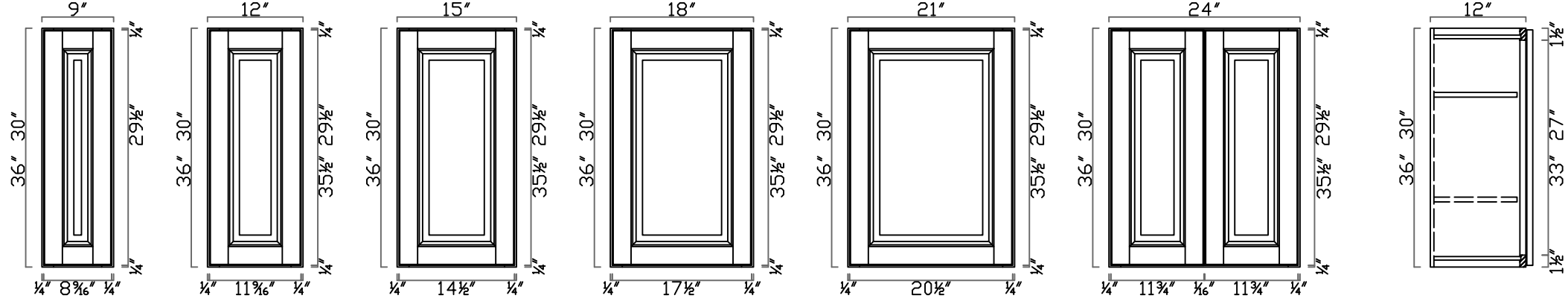

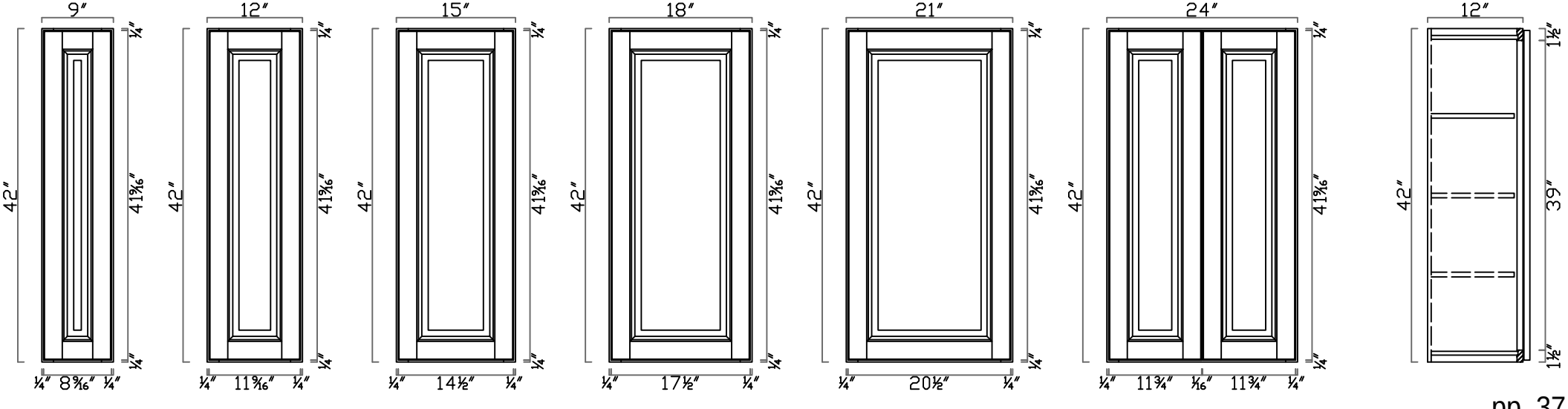

W2730	W3030	W3330	W3630	W4230
W2736	W3036	W3336	W3636	
W2742	W3042	W3342	W3642	W4242

GHI Cabinetry

NTL

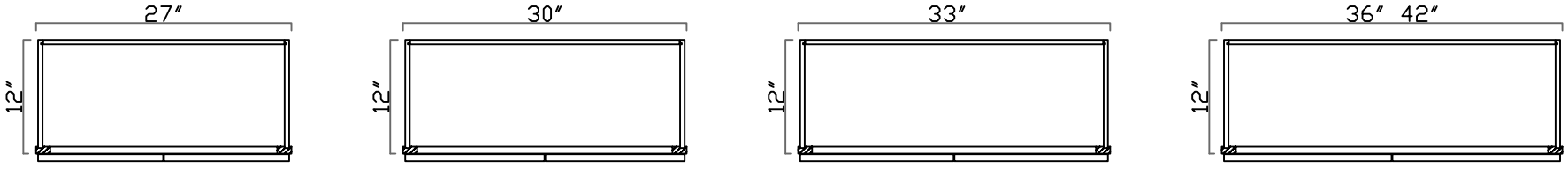

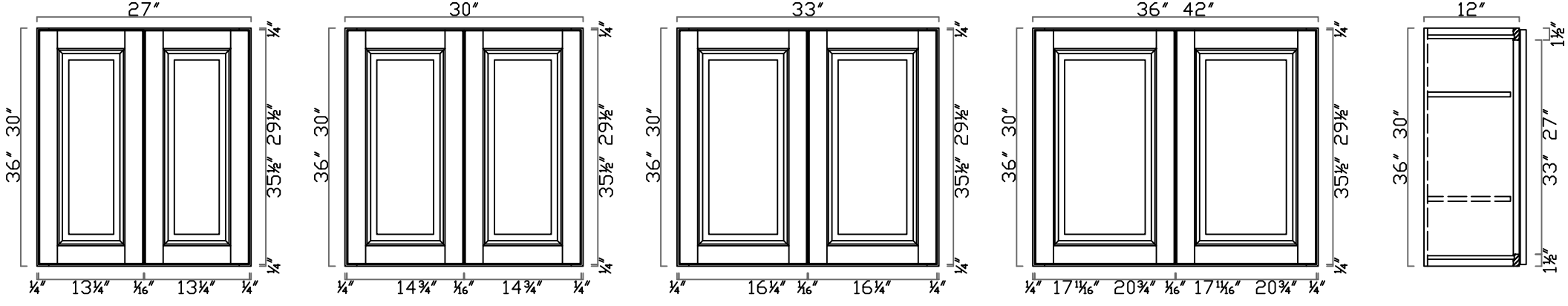

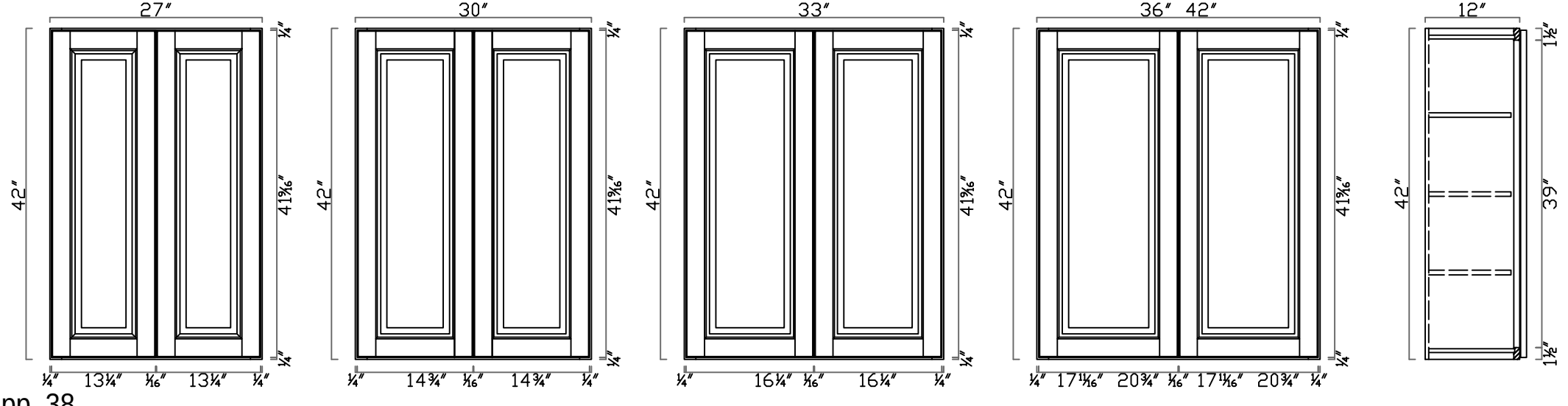

WAC2430	WBC2730	WDC2430
WAC2436		WDC2436
WAC2442		WDC2442

GHI Cabinetry

NTL

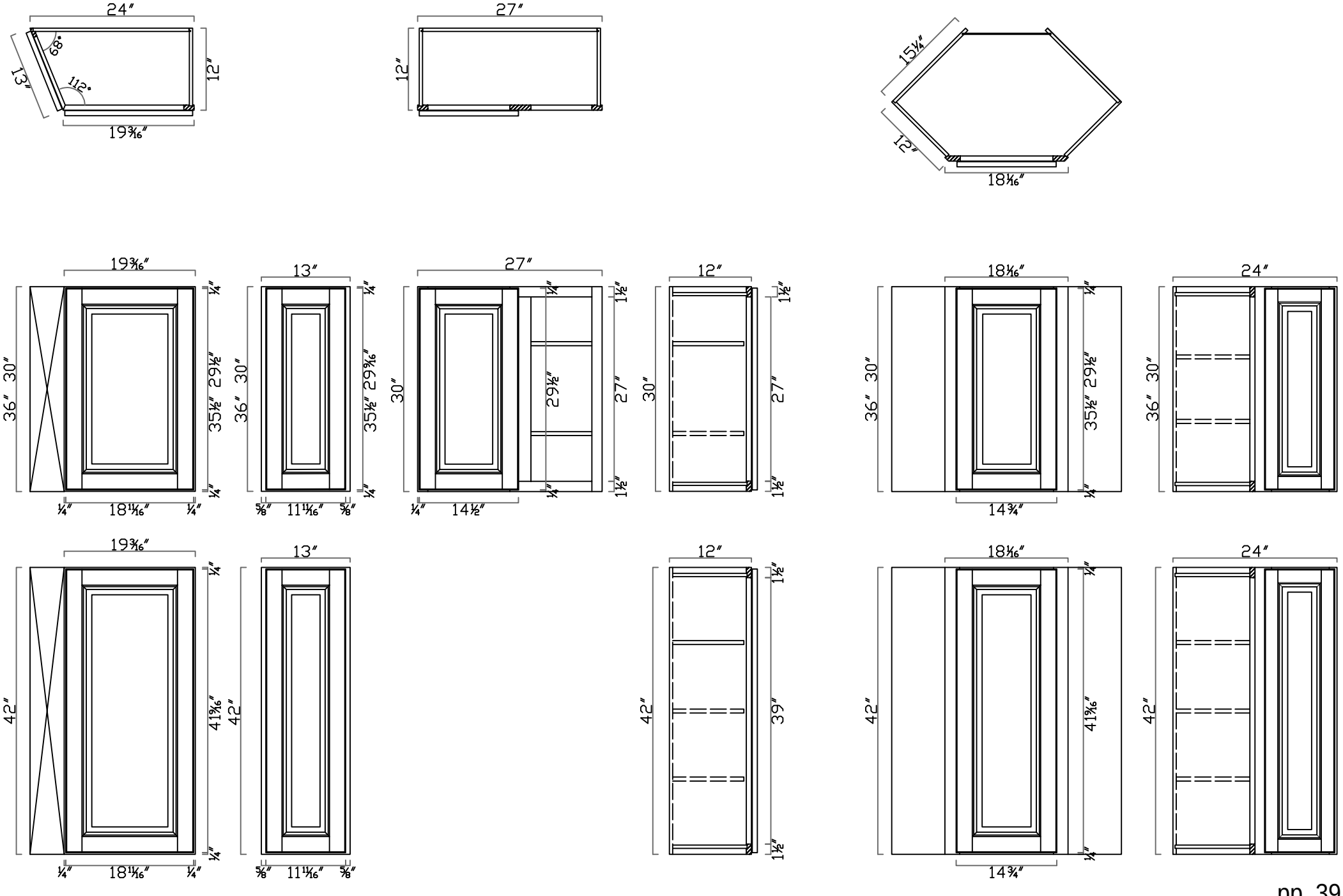

W2415	W3315	W3015	W3012	W3615	W3612
WDC2742		W3018	W3024	W3618	W3624

GHI Cabinetry

NTL

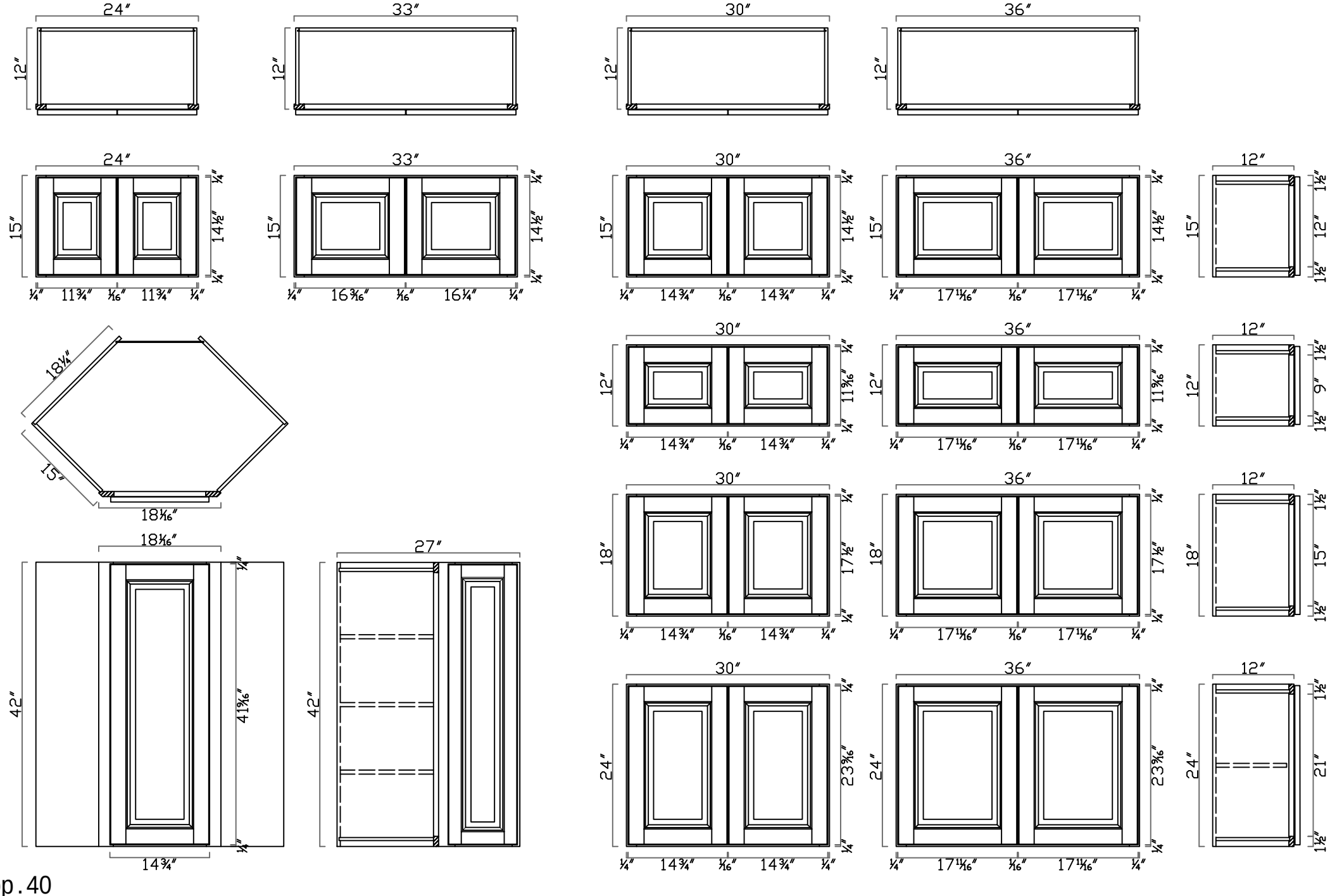

W301224		W183624	W243624
W331224	W361224	W184224	W244224
W331524	W361524		

GHI Cabinetry

NTL

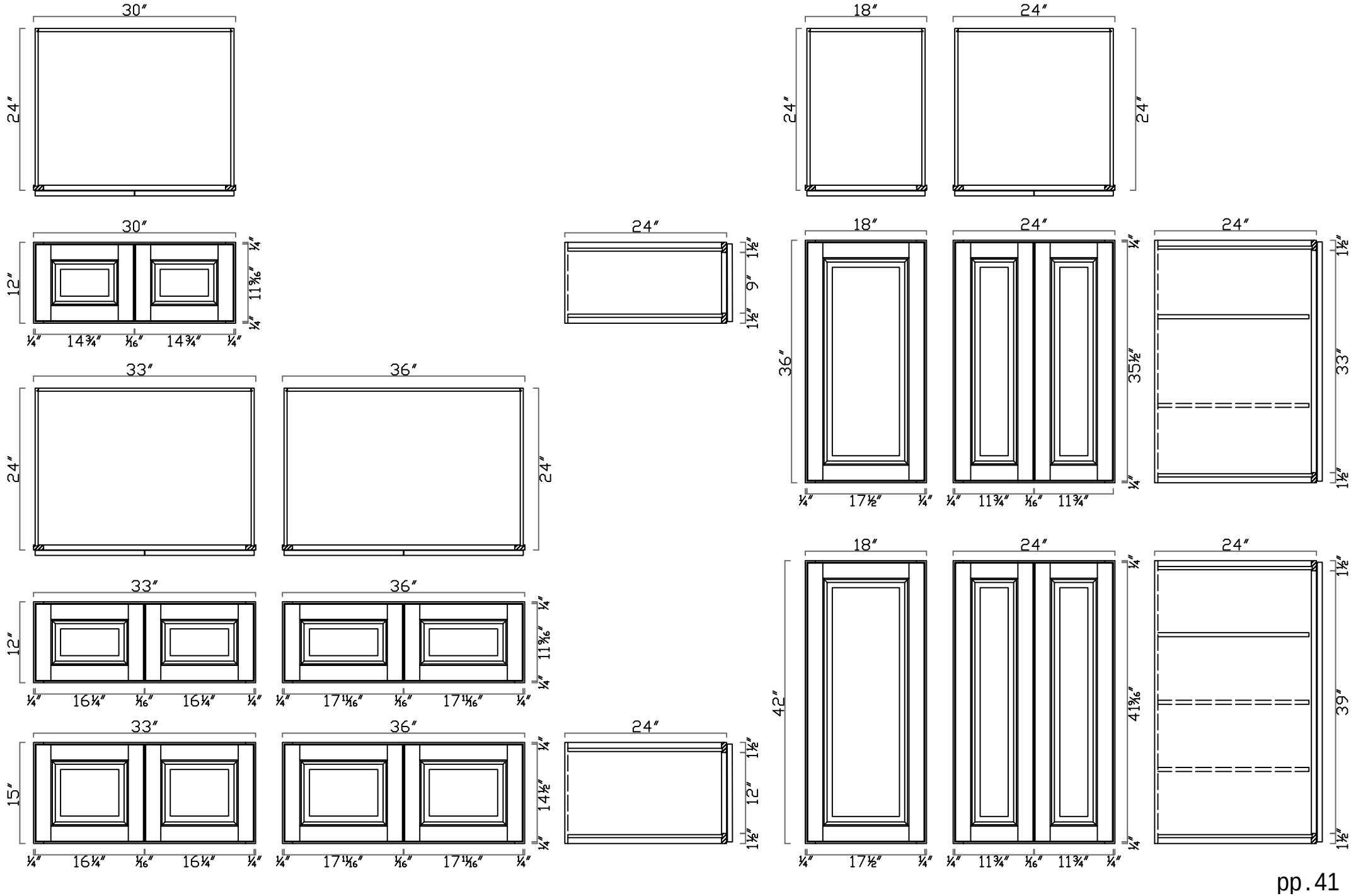

W361824		MC3018	GHI Cabinetry
W332424	W362424	RP3015	WR3015
		WR1818	NTL

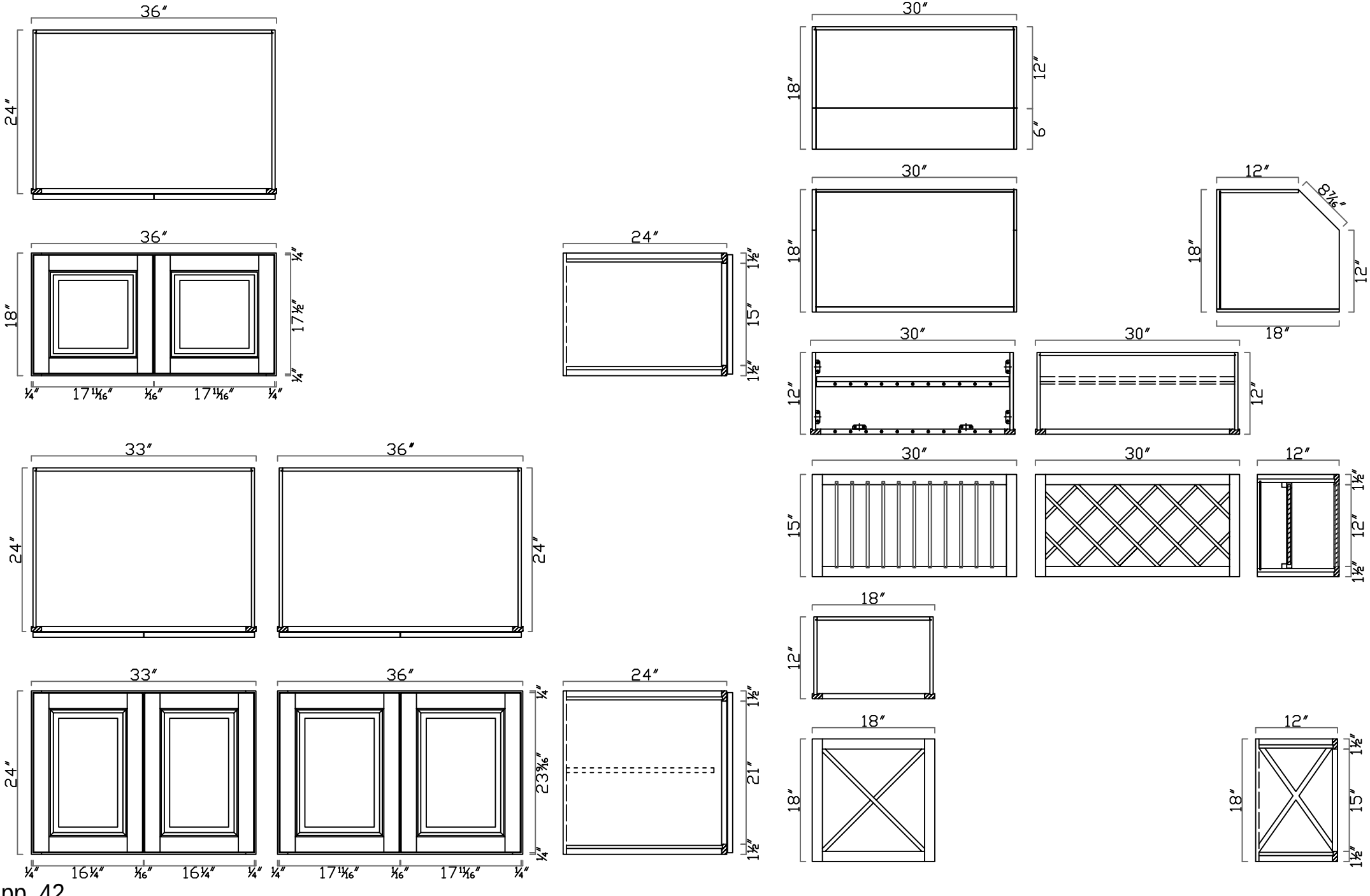

B09 (FH)	B18 (FH)	B18	B21
B12	B15	B24	B27

GHI Cabinetry

NTL

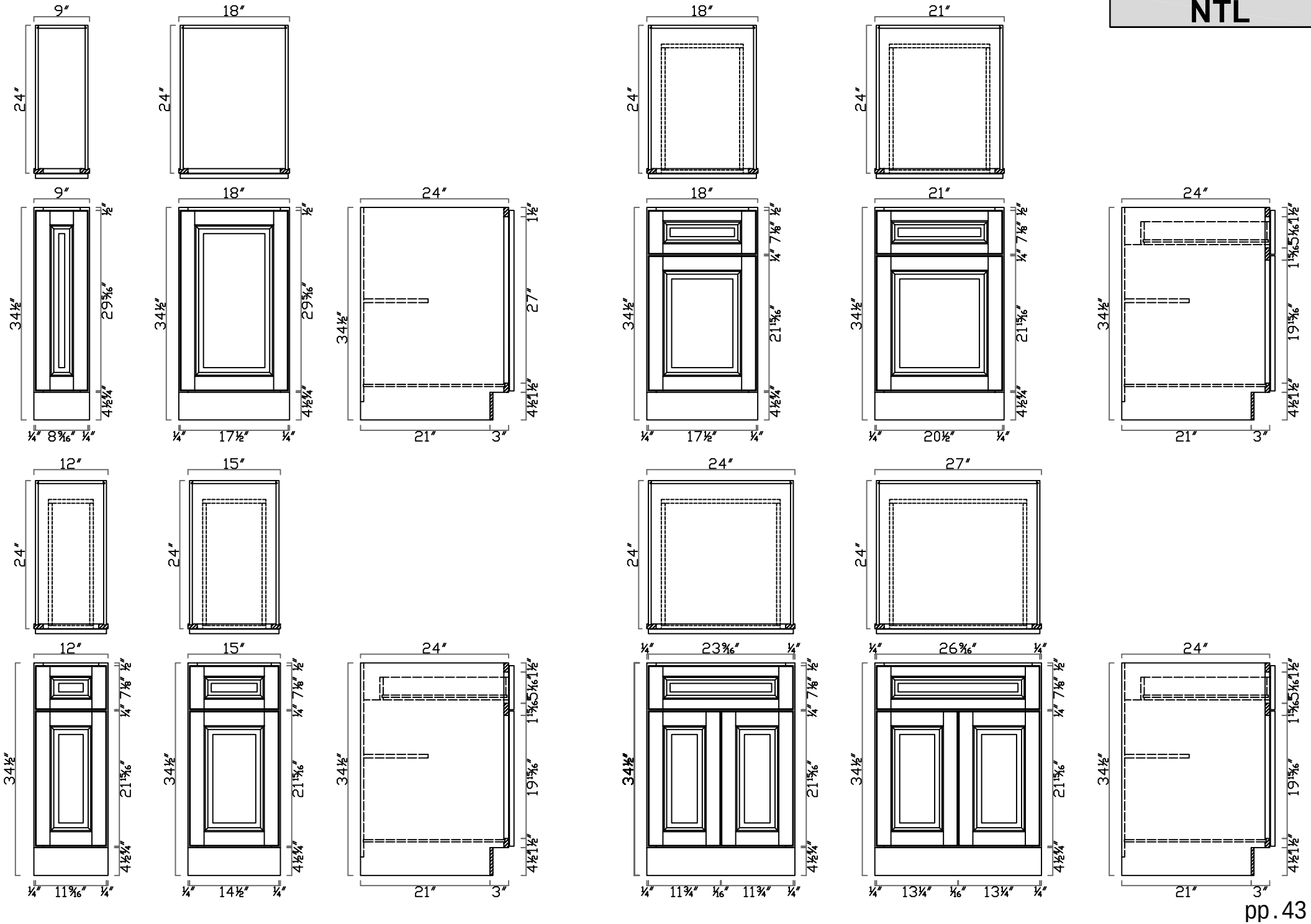

B30	B33	MB30
B36	B42	BBC42-45

GHI Cabinetry

NTL

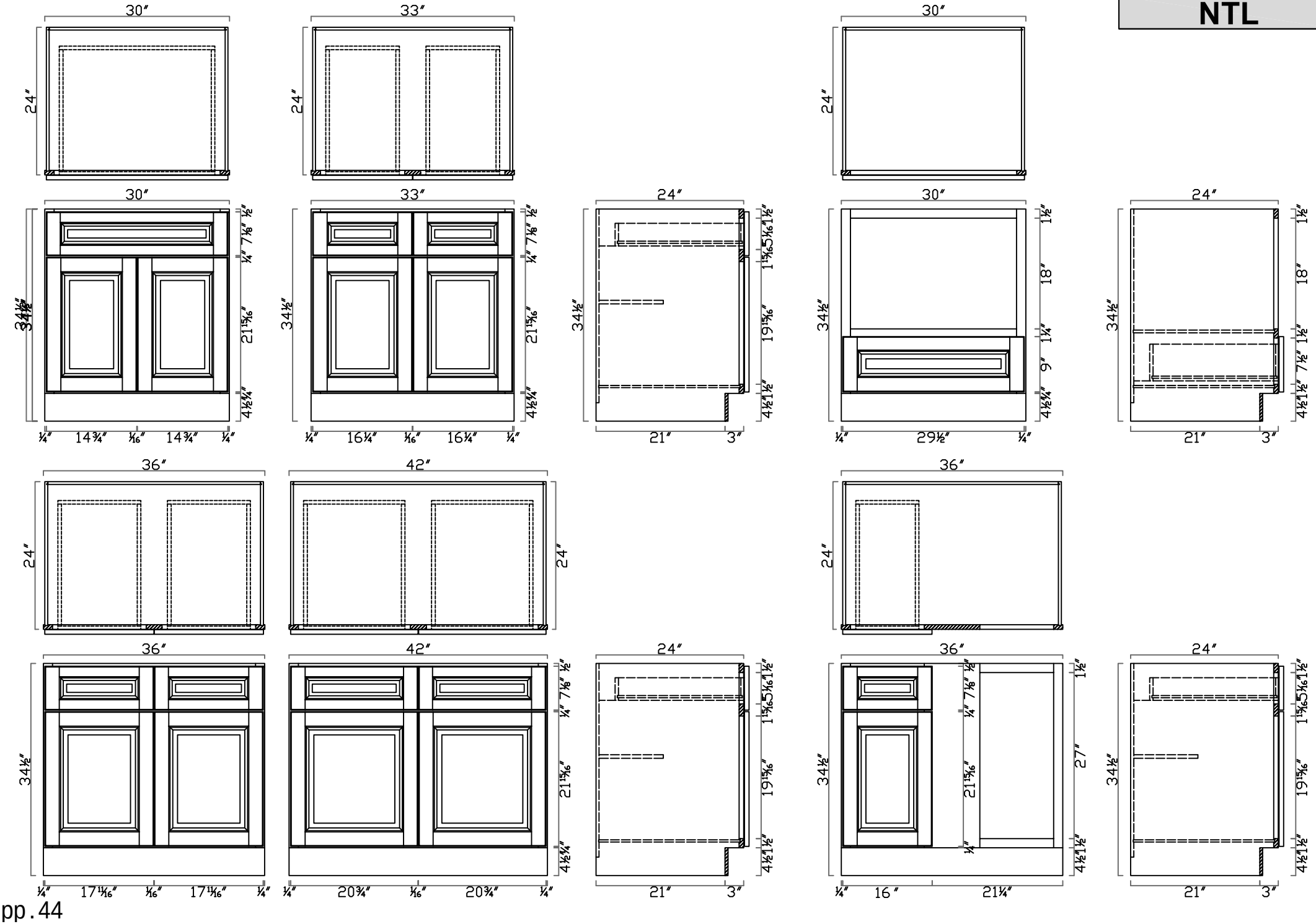

DB15	DB18	DB30
DB21	DB24	

GHI Cabinetry

NTL

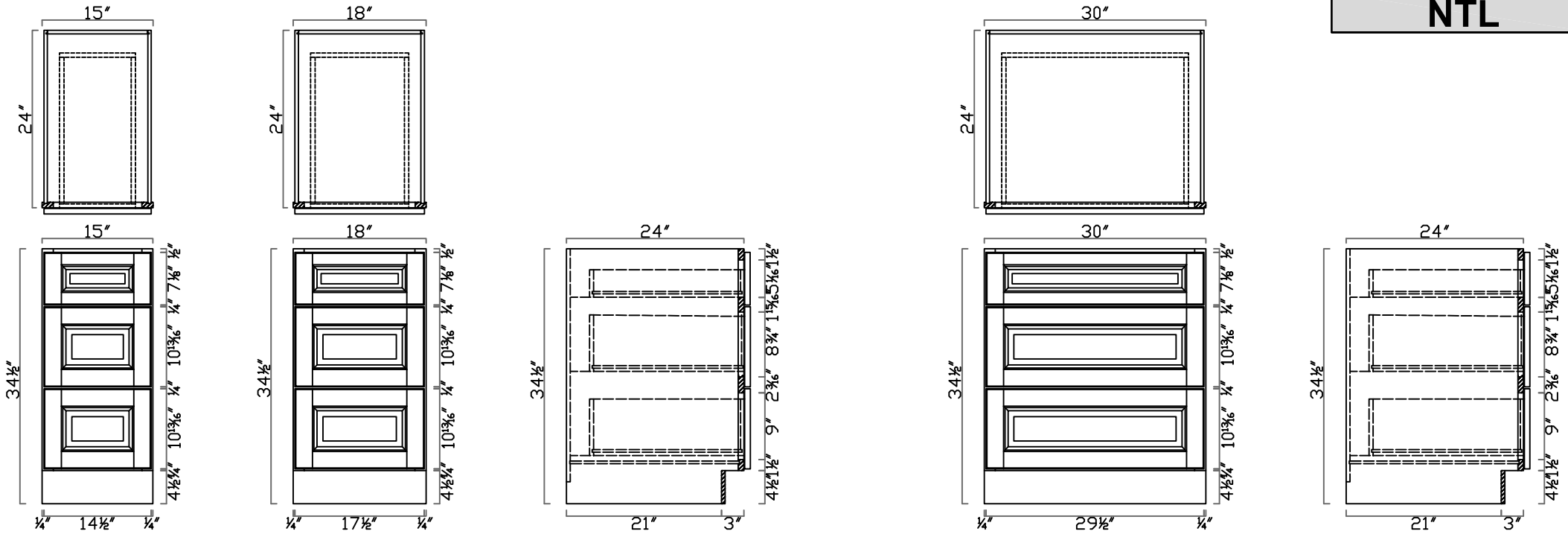

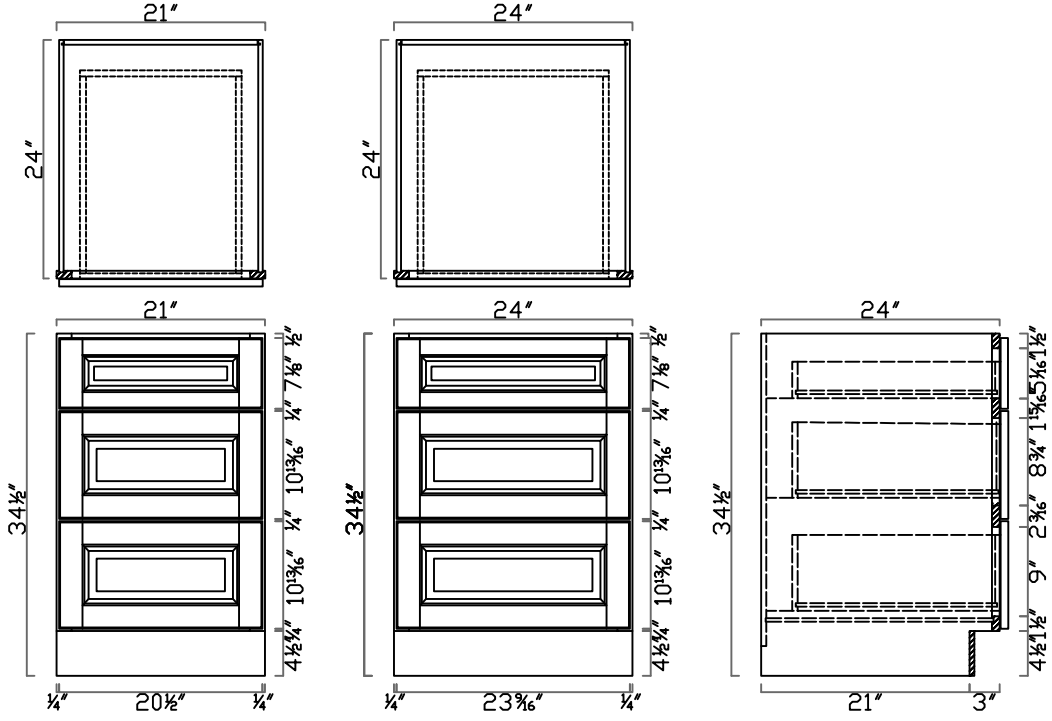

DB24-2	DB30-2	BC24
DCB3612		ER3309

GHI Cabinetry

NTL

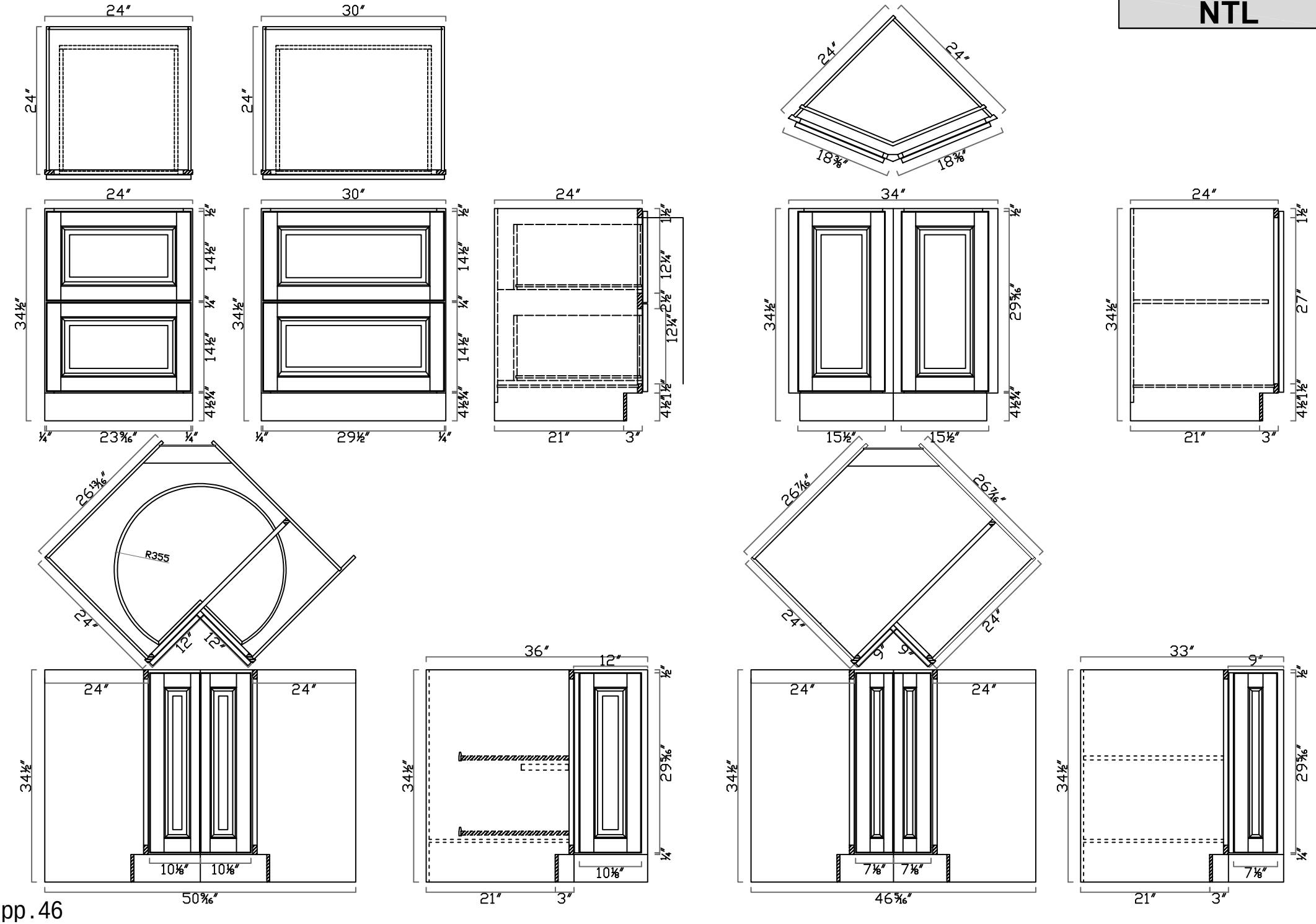

SB30	SB33	FSB36
SB36		SB42

GHI Cabinetry

NTL

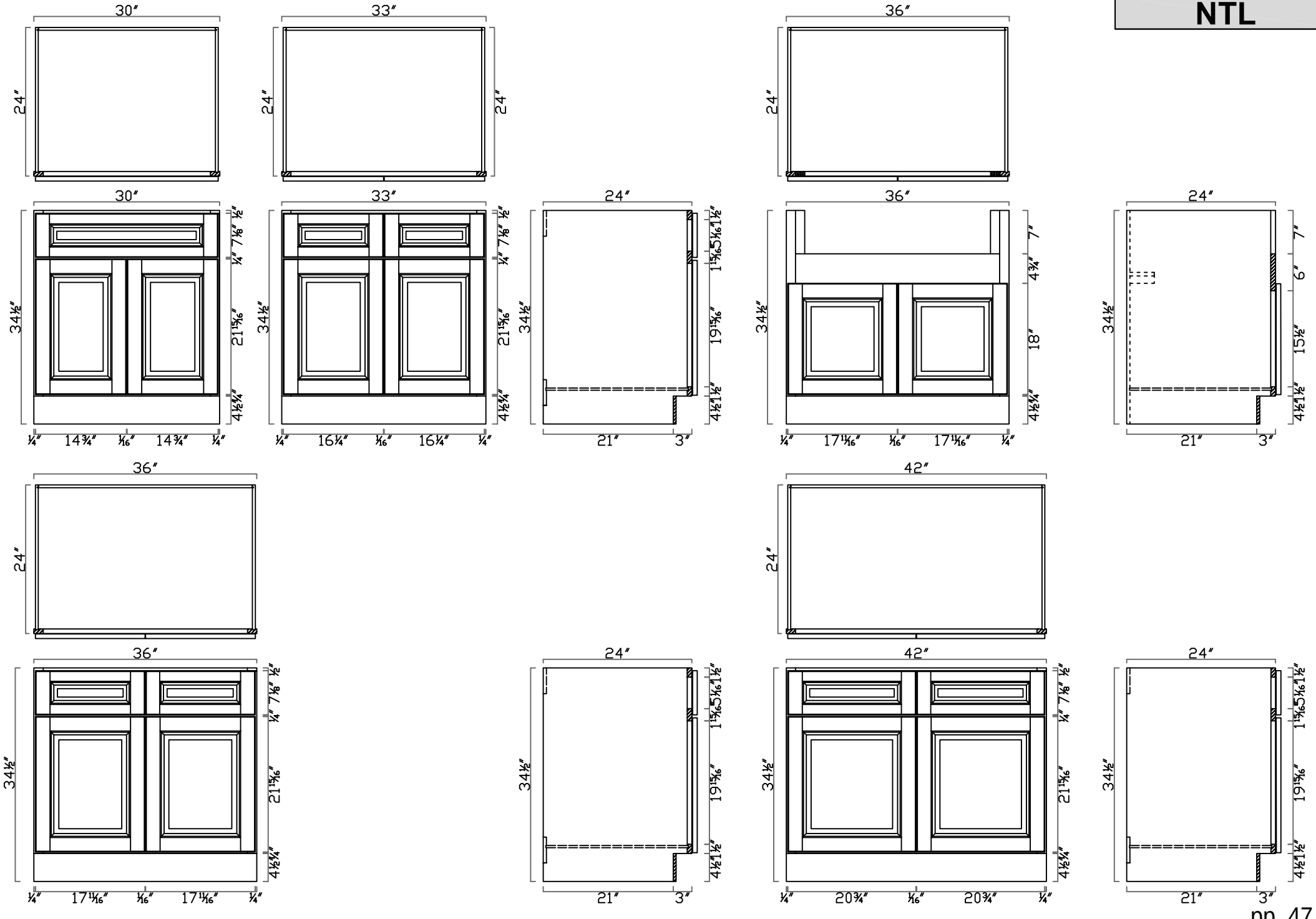

SB60		WP1884	WP2484
UCB1854	UCB2454		

GHI Cabinetry

NTL

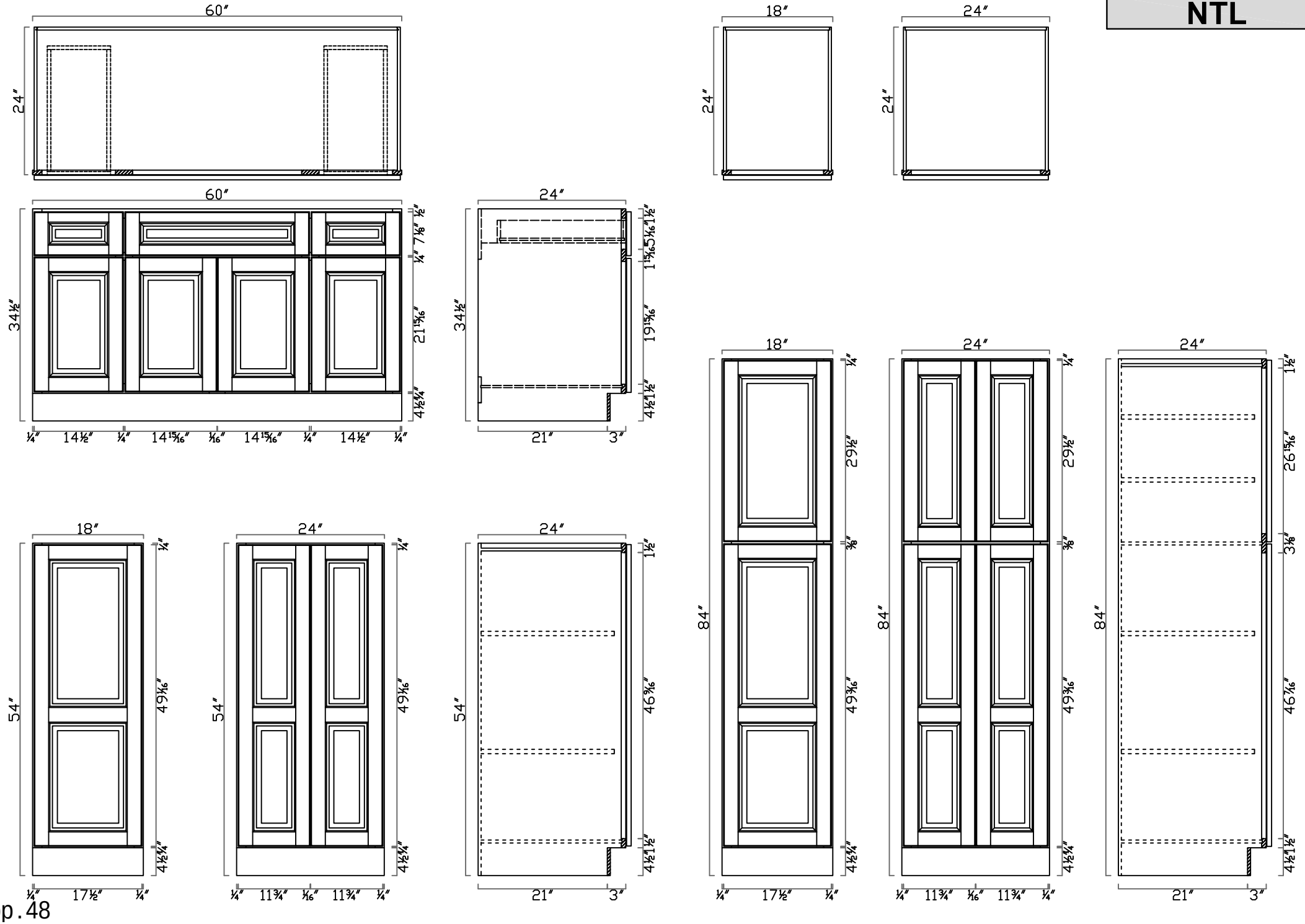

0U332484

0U332490

GHI Cabinetry

NTL

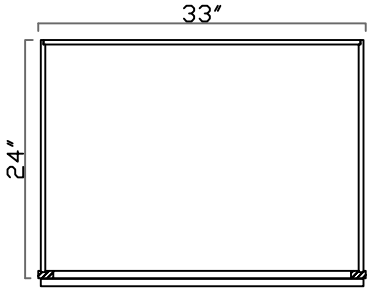

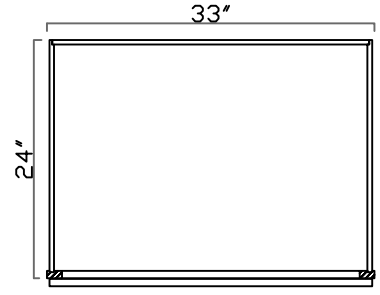

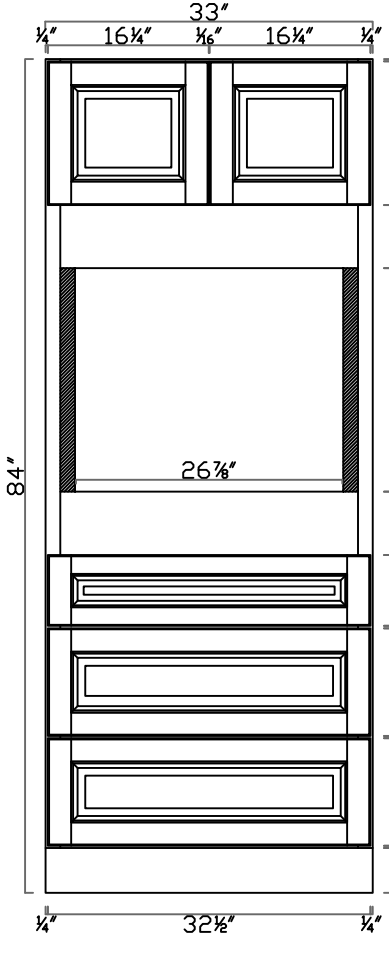

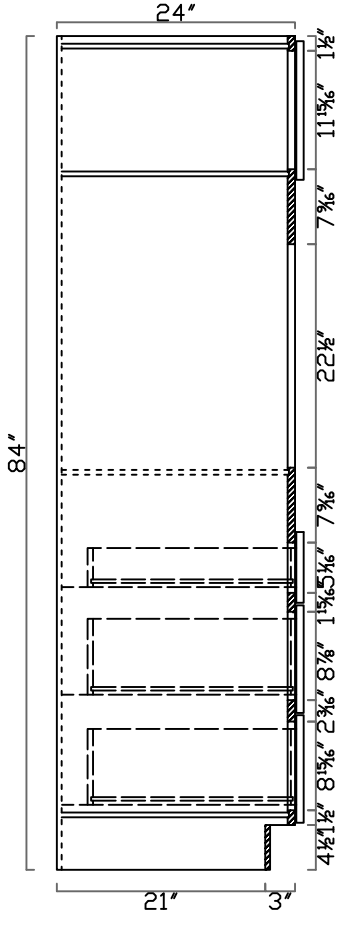

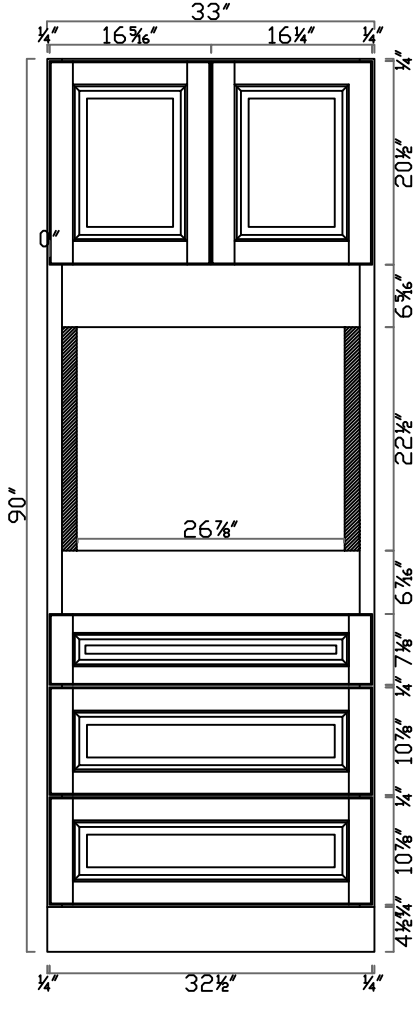

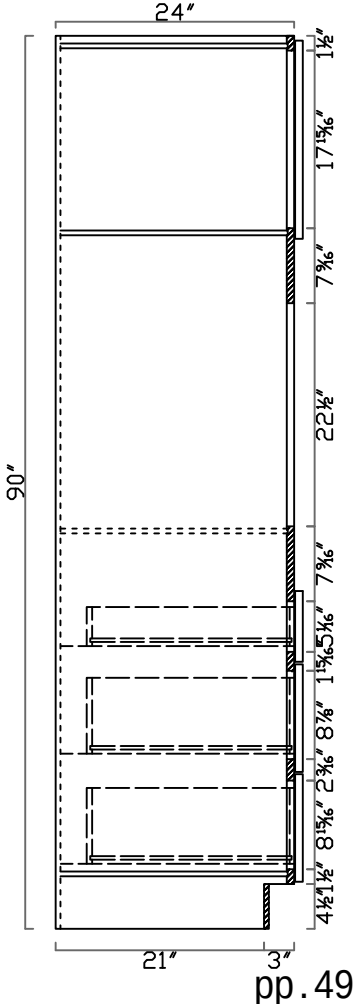

V2421	V3021D	V3621D (L)
VDB1221	V3621D	V4821D

GHI Cabinetry

NTL

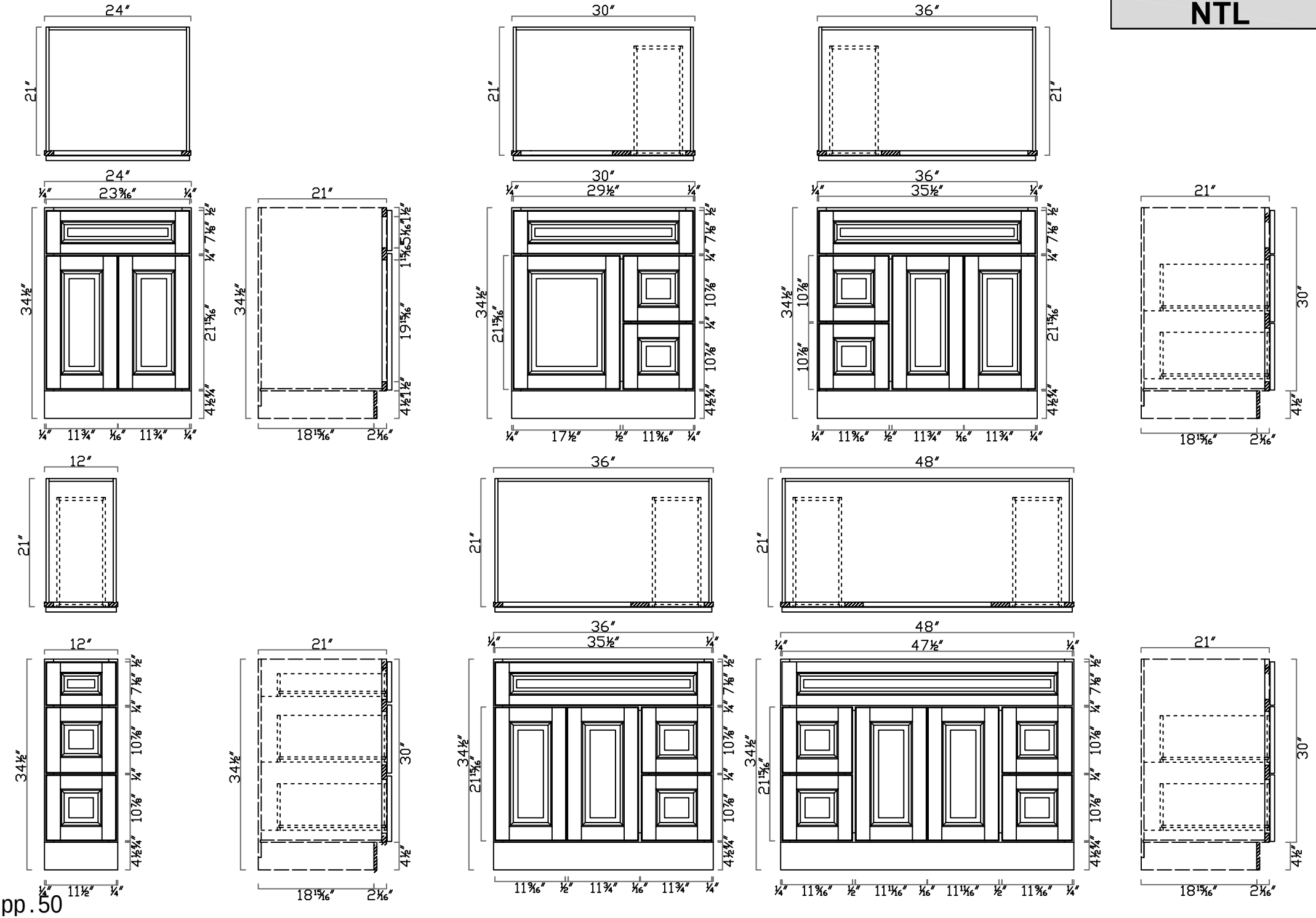

V6021D	M3030	M3630
BV2126	L781821	

GHI Cabinetry

NTL

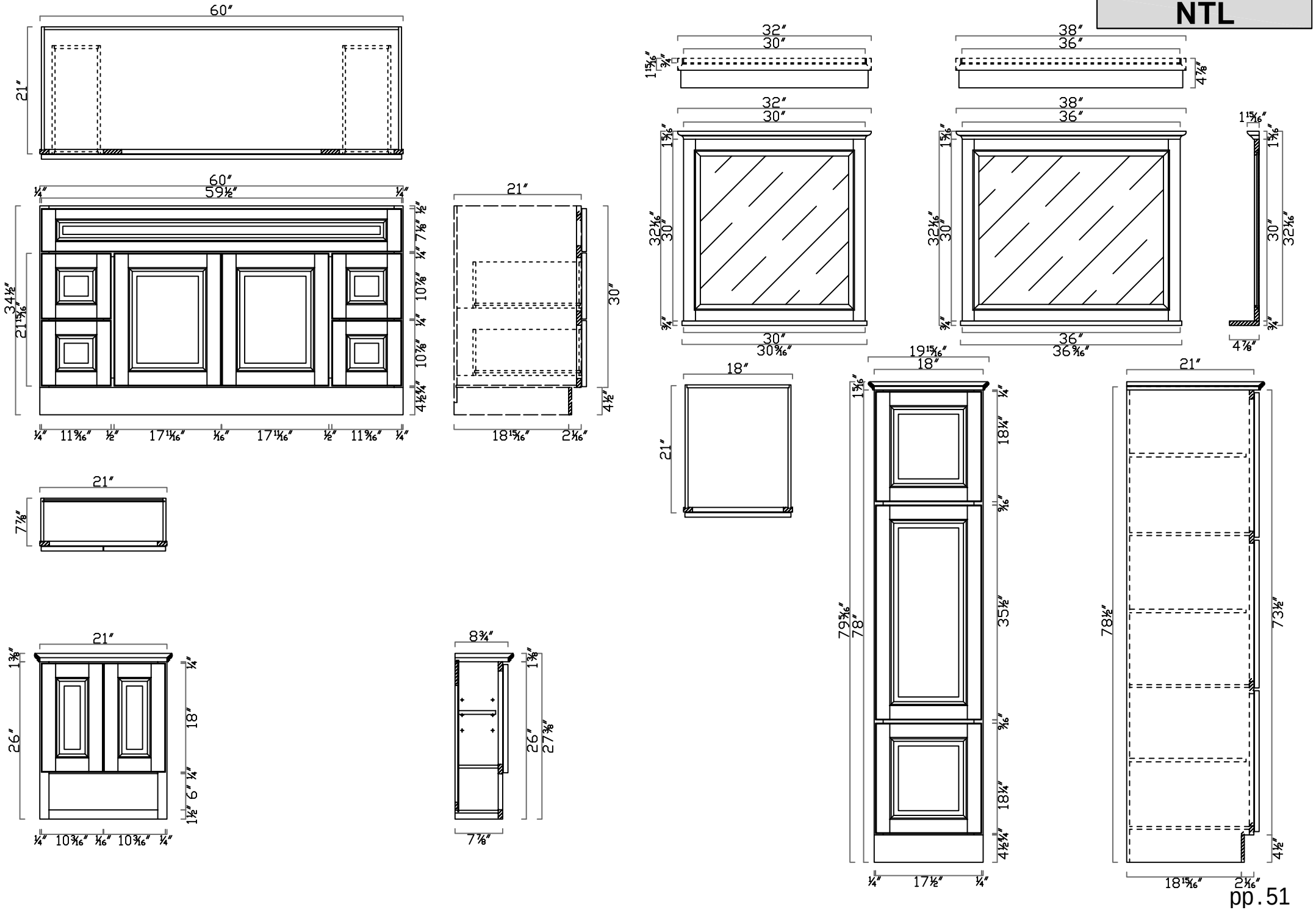

V2421	V3021D	V3621D (L)
VDB1221	V3621D	V4821D

GHI Cabinetry

UFO

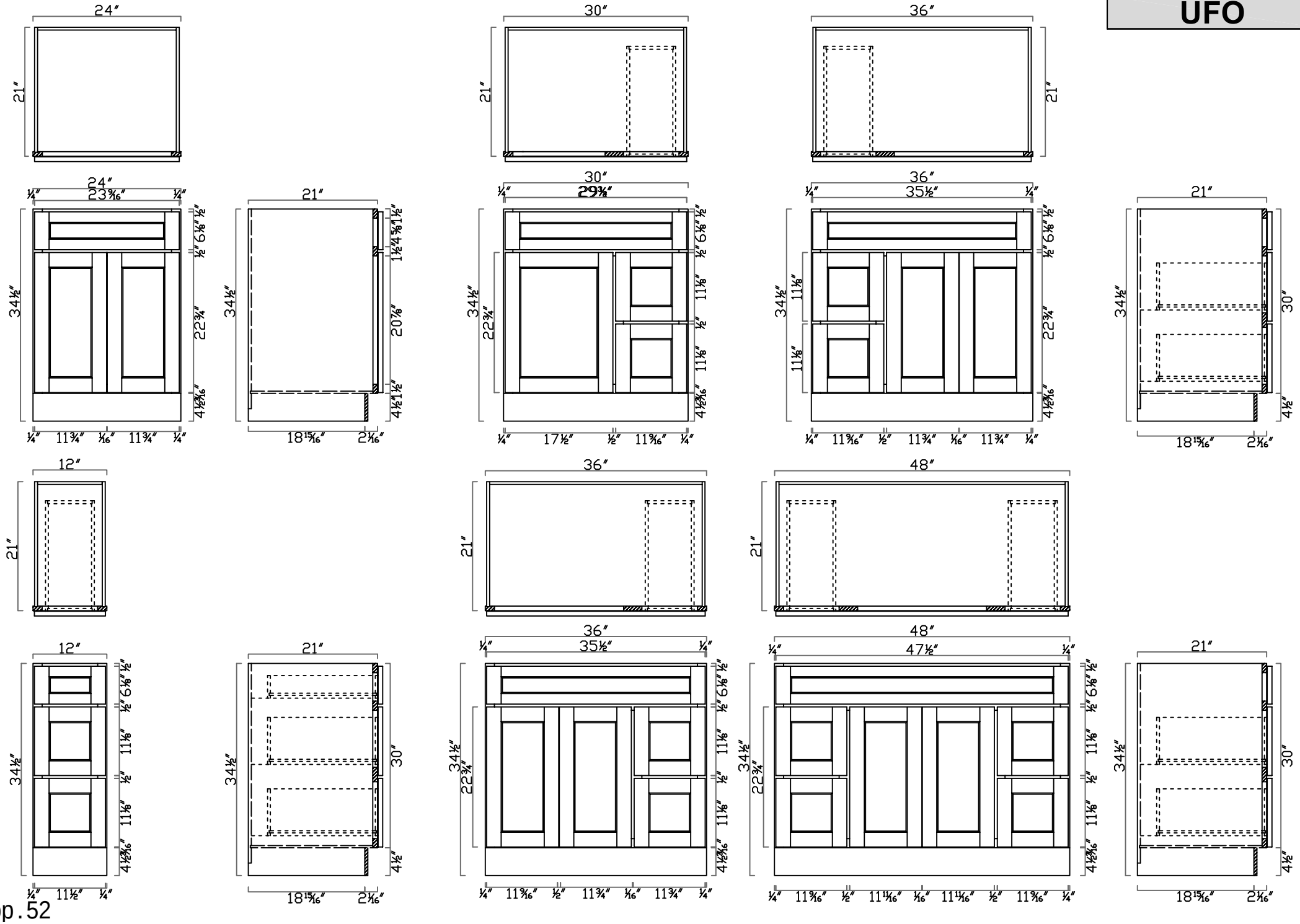

V6021D	M3030	M3630
BV2126	L781821	

GHI Cabinetry

UFO

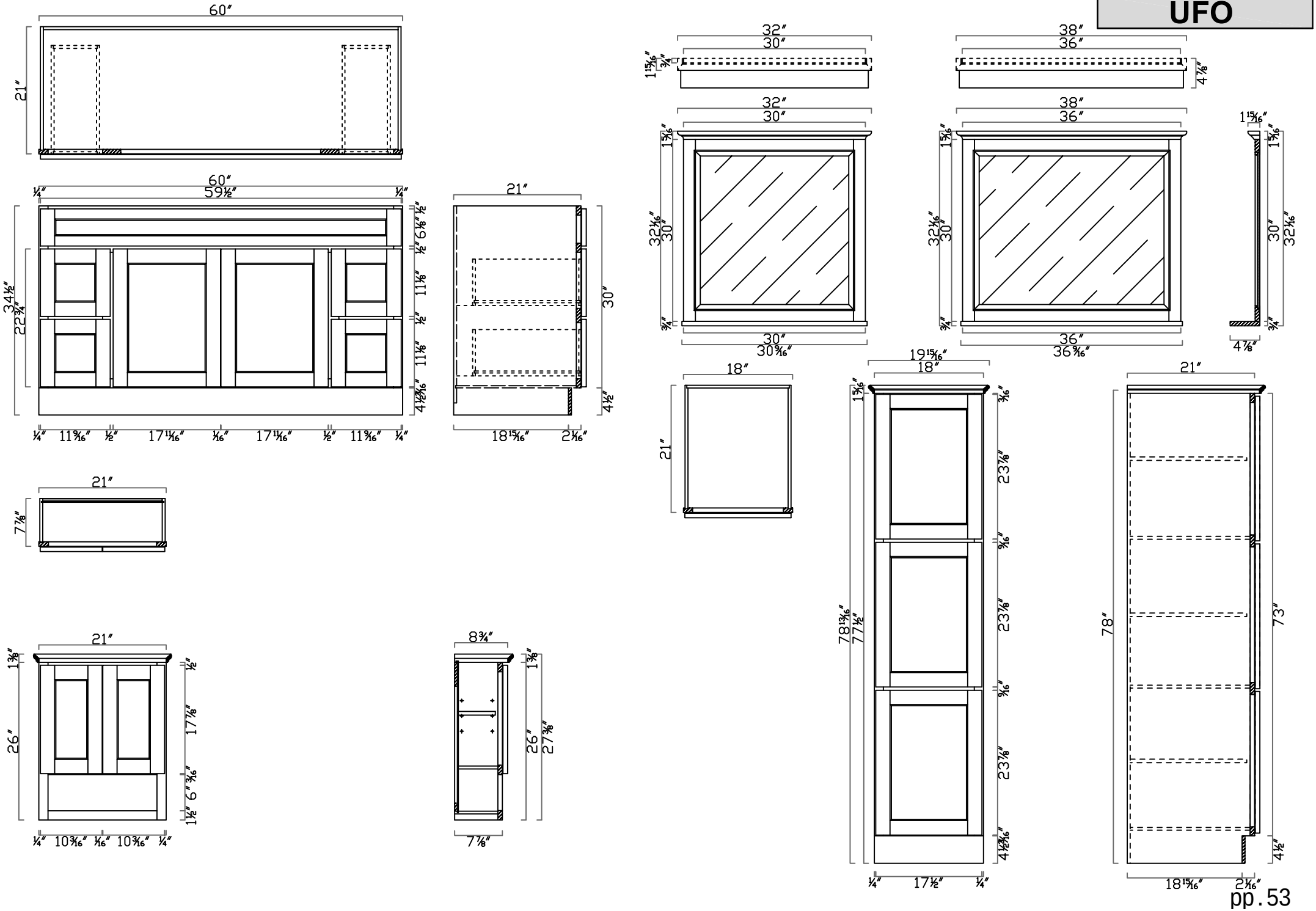

W0930	W1230	W1530	W1830	W2130	W2430
W0936	W1236	W1536	W1836	W2136	W2436
W0942	W1242	W1542	W1842	W2142	W2442

GHI Cabinetry

FTS RWS

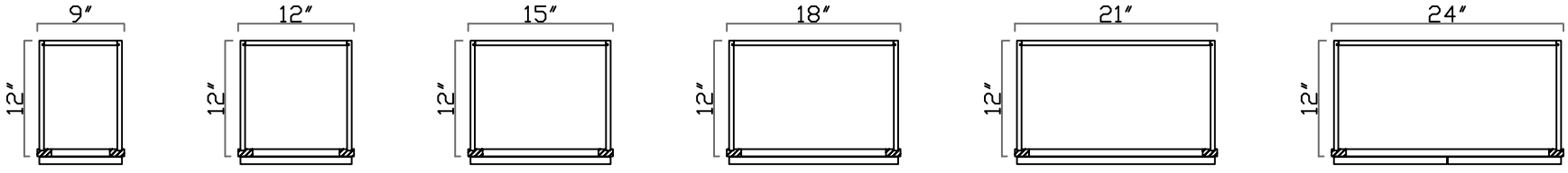

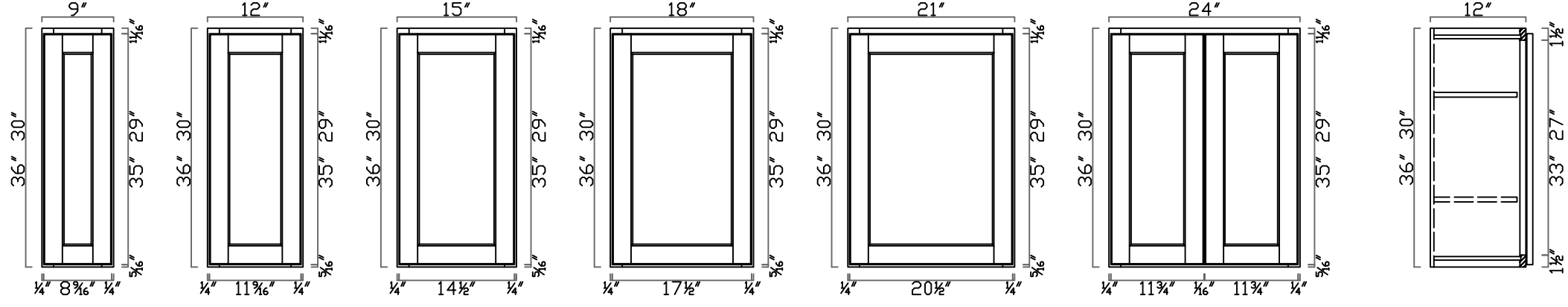

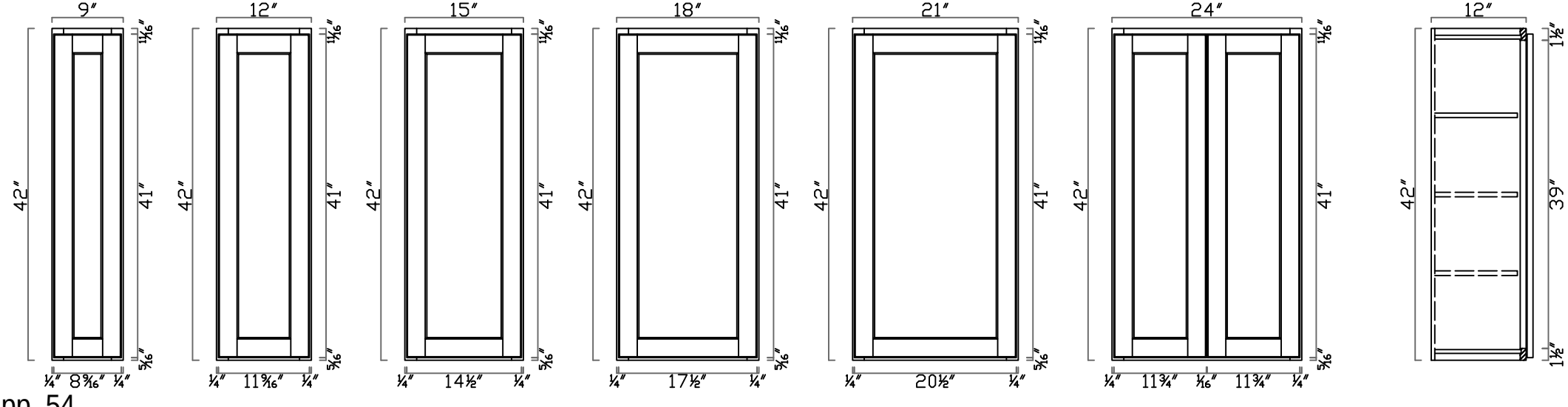

W2730	W3030	W3330	W3630
W2736	W3036	W3336	W3636
W2742	W3042	W3342	W3642

GHI Cabinetry

FTS RWS

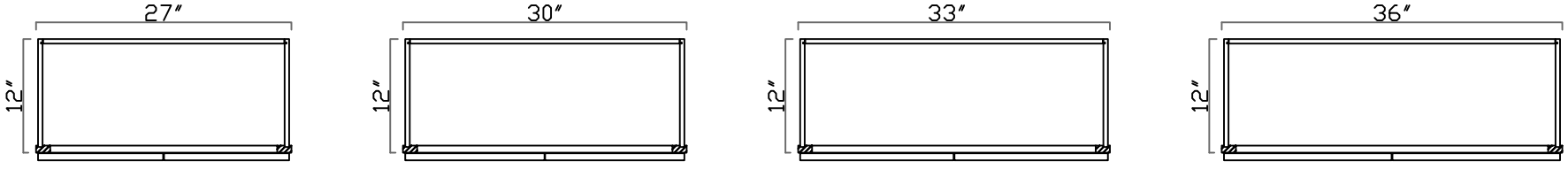

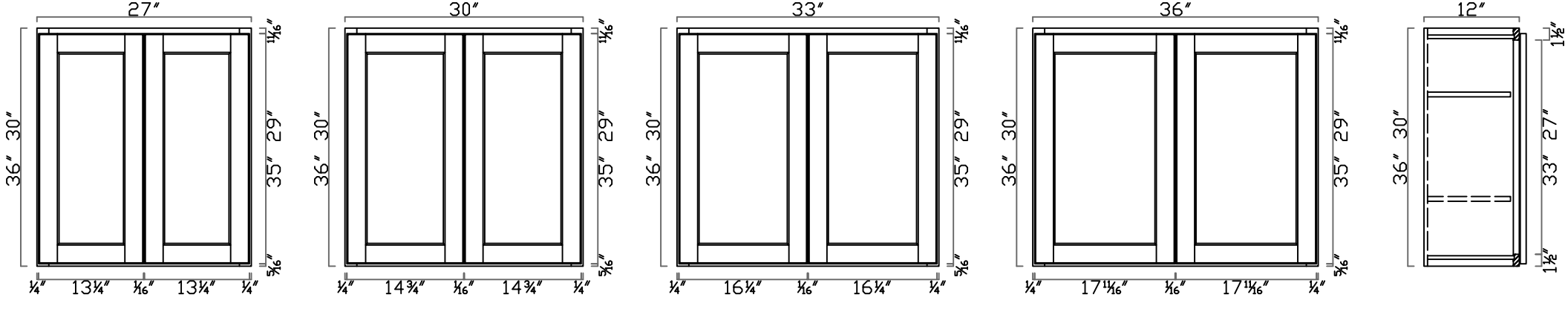

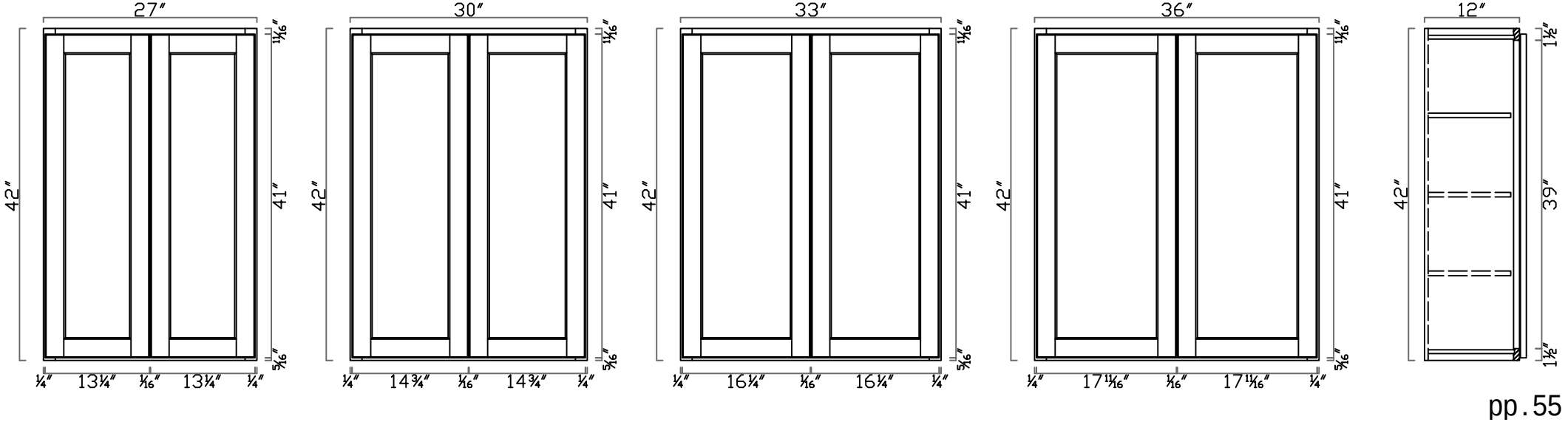

WAC2430	WBC2730	WDC2430
WAC2436		WDC2436
WAC2442		WDC2442

GHI Cabinetry

FTS RWS

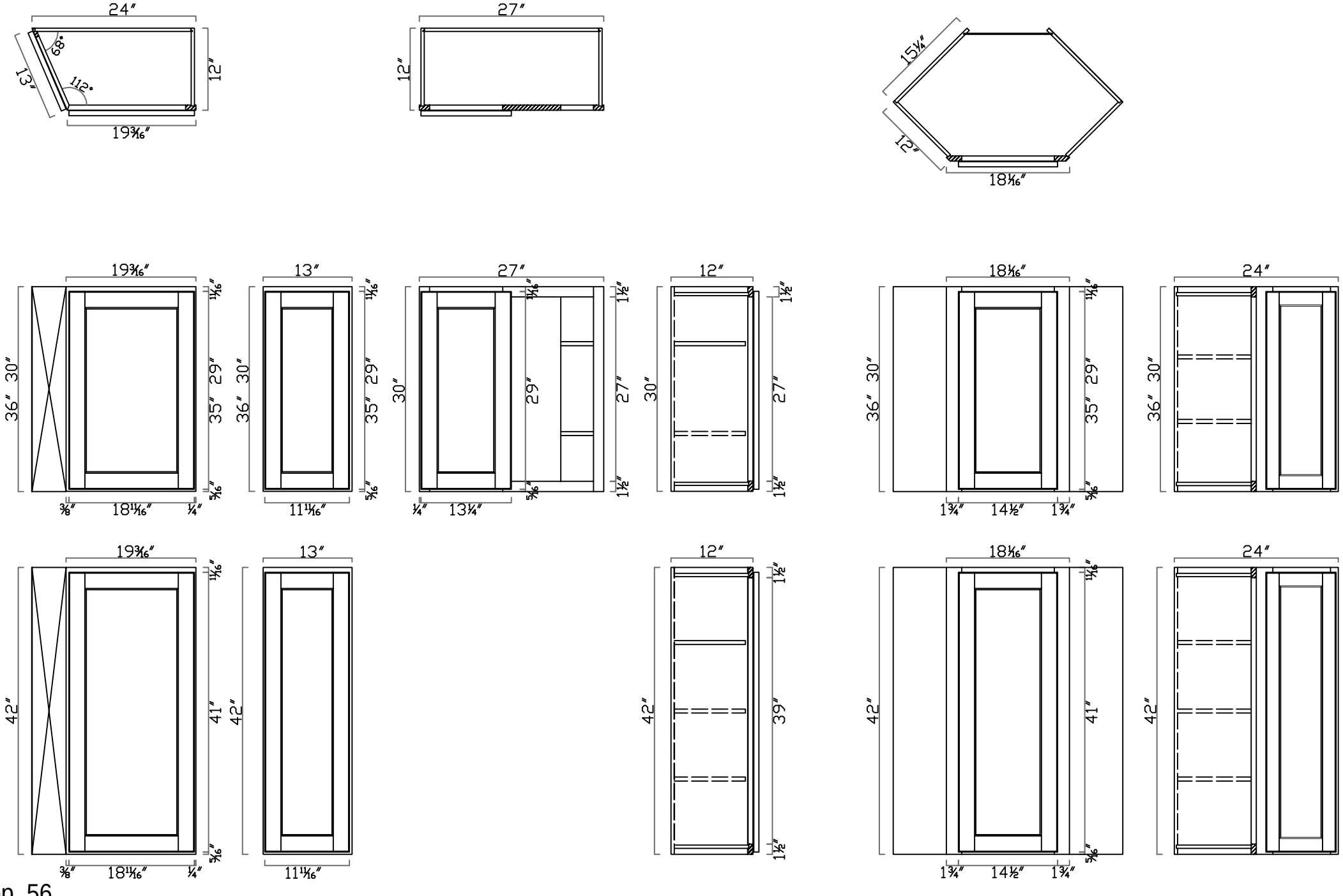

WDC2736	W3012	W3015	W3612	W3615
WDC2742	W3018	W3024	W3618	W3624

GHI Cabinetry

FTS RWS

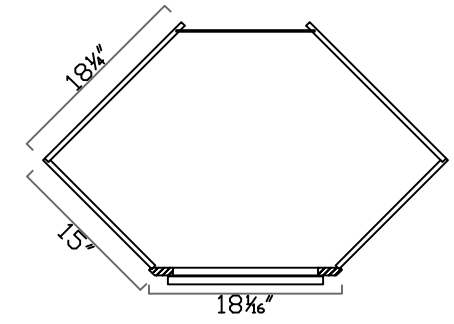

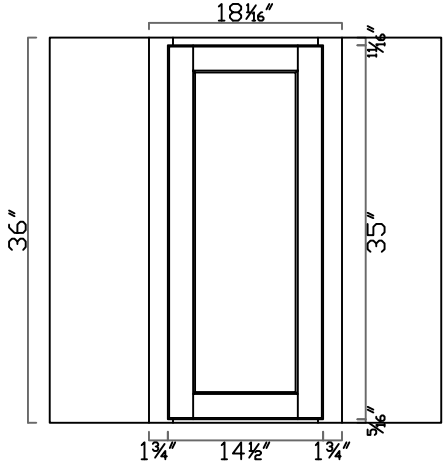

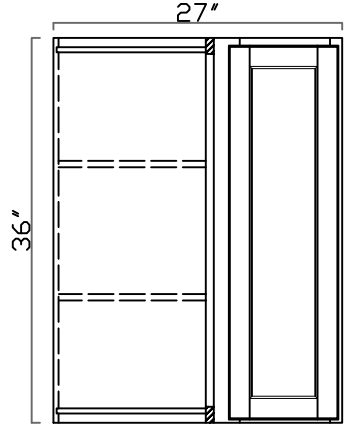

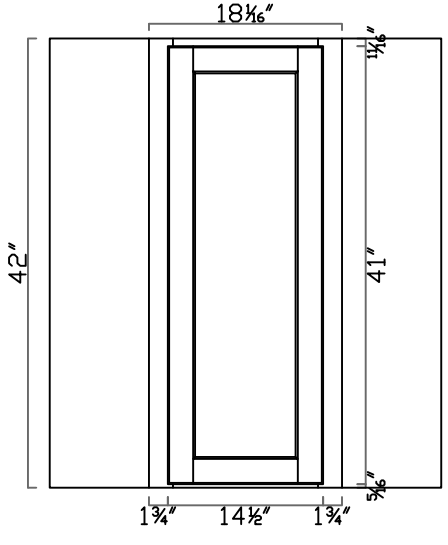

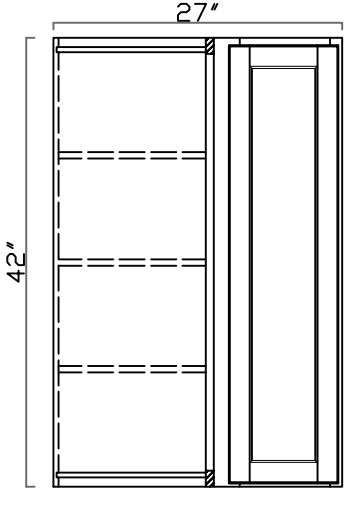

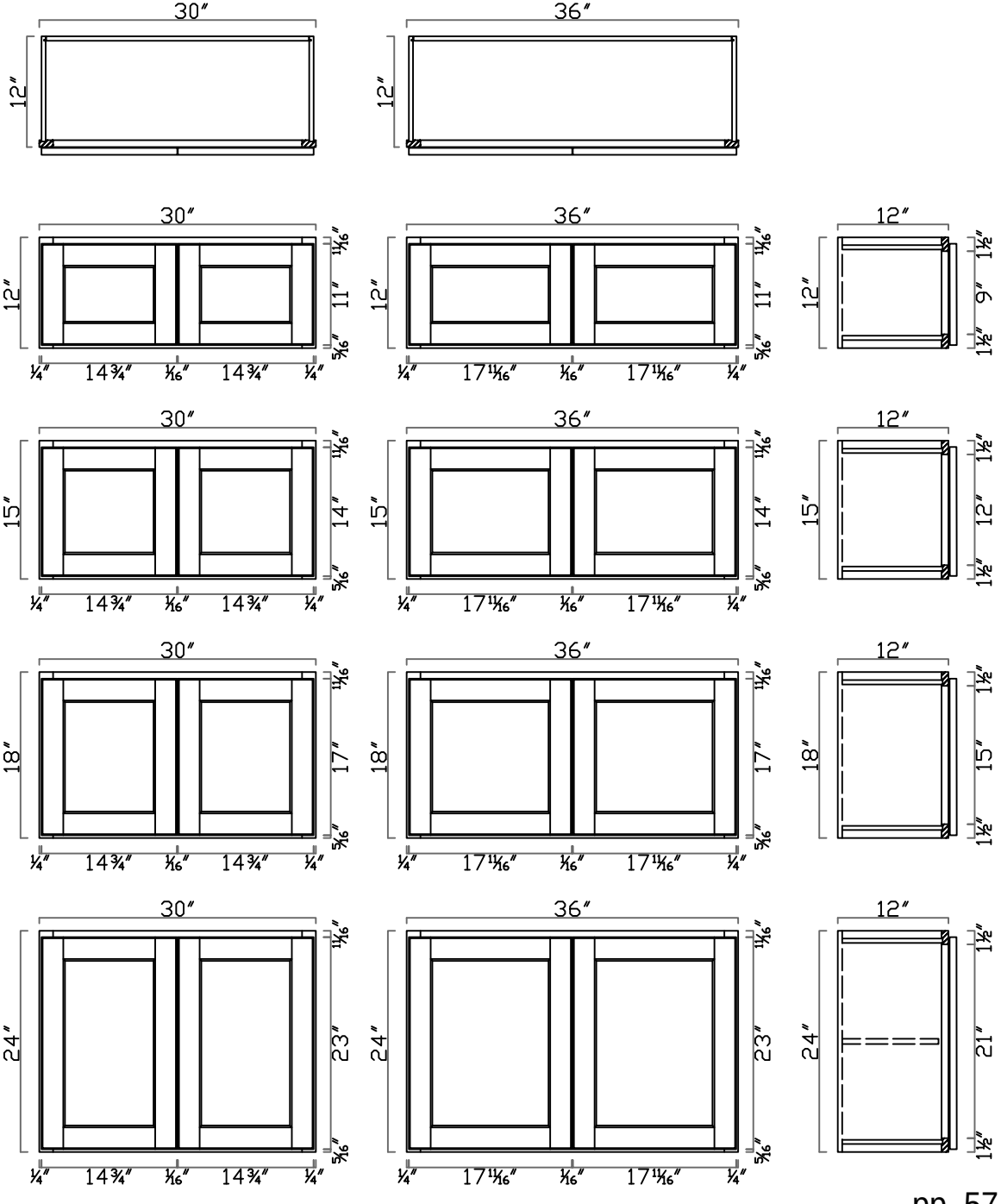

W2415	W3315	W183624	W243624
W331224	W361224	W184224	W244224
W331524	W361524		

GHI Cabinetry

FTS RWS

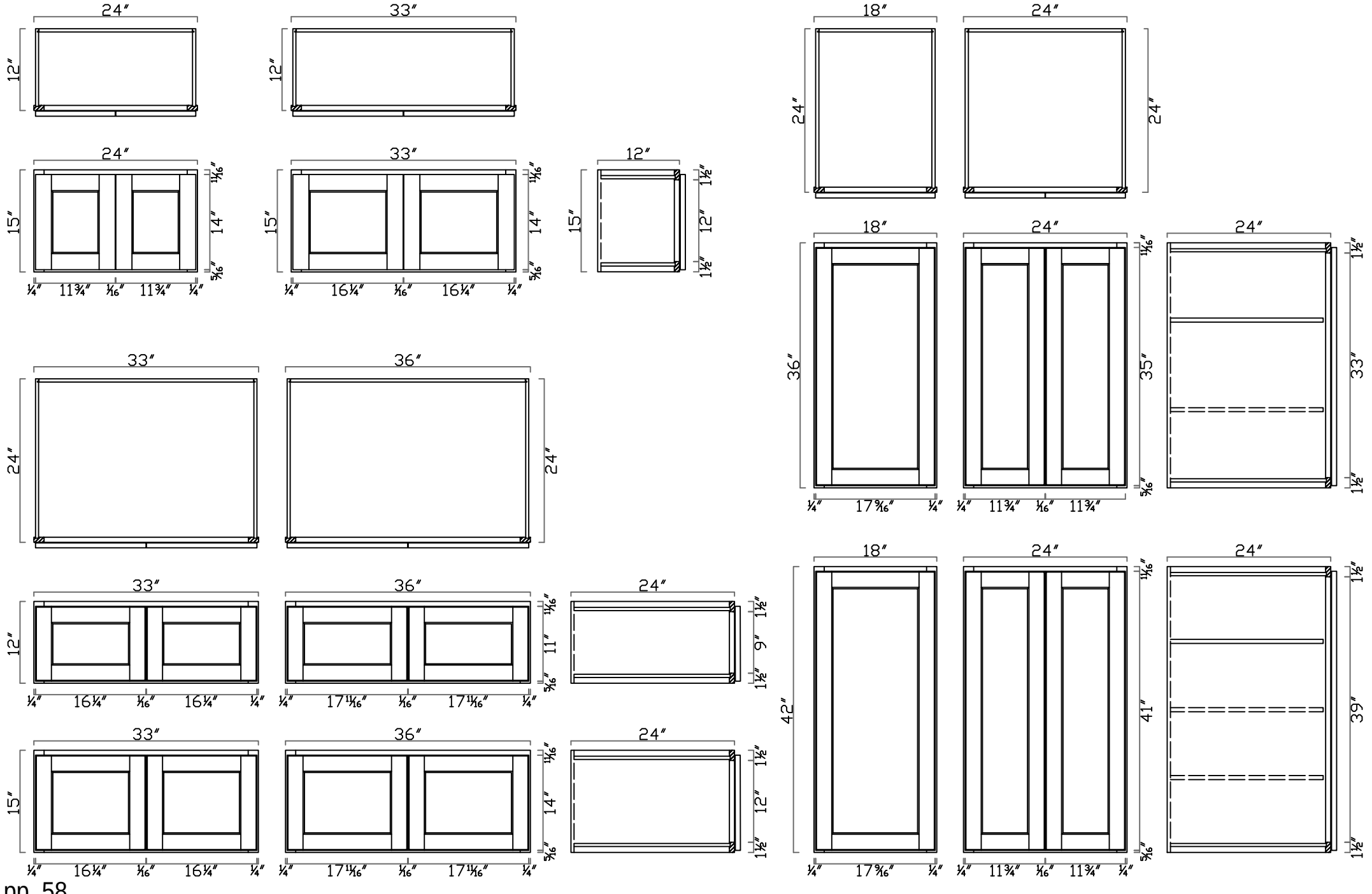

W361824		MC3018	
W332424	W362424	RP3015	WR3015
		WR1818	

GHI Cabinetry

FTS RWS

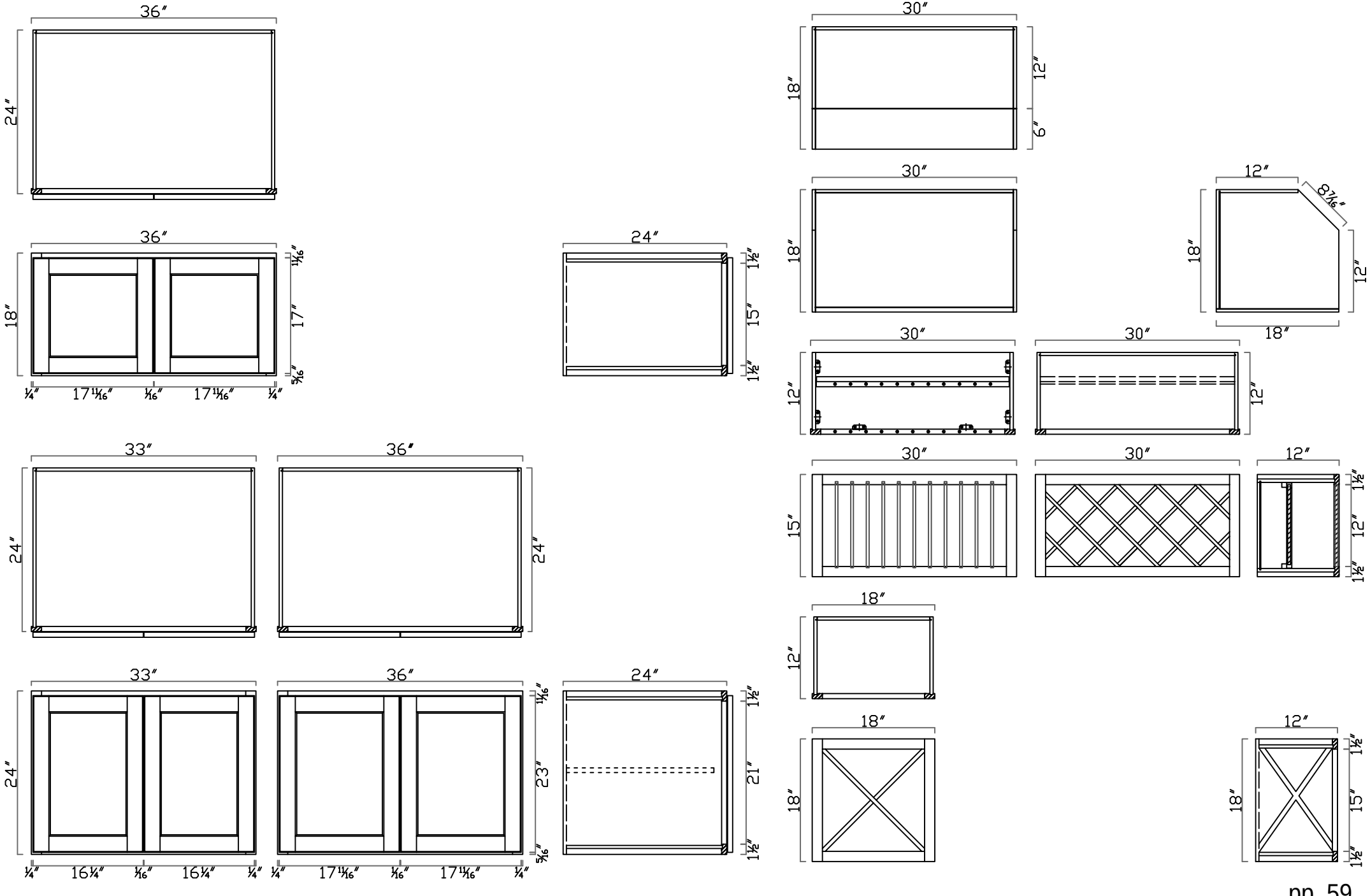

B09 (FH)	B18 (FH)	B18	B21
B12	B15	B24	B27

GHI Cabinetry

FTS RWS

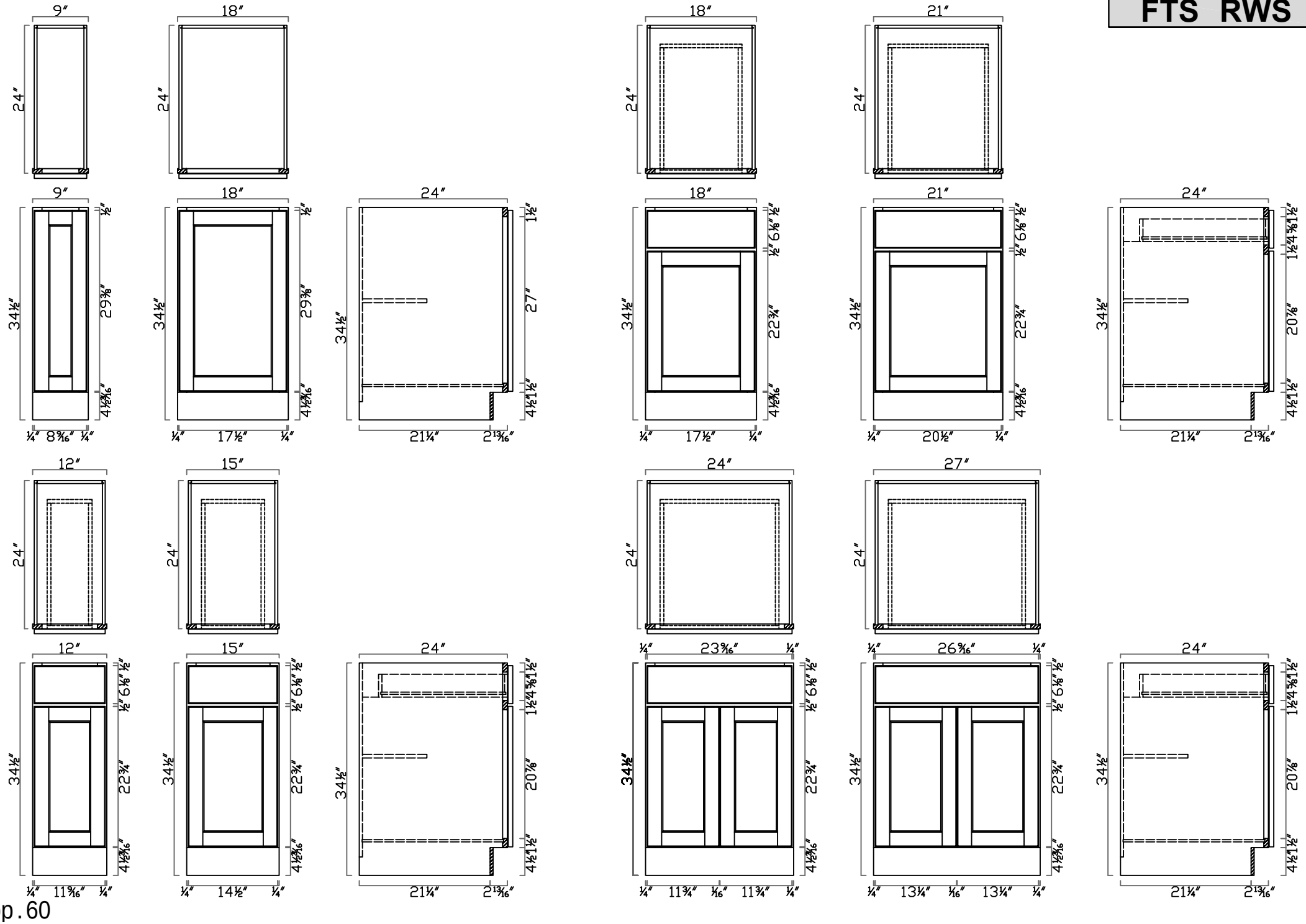

B30	B33	MB30
B36		BBC42-45

GHI Cabinetry

FTS RWS

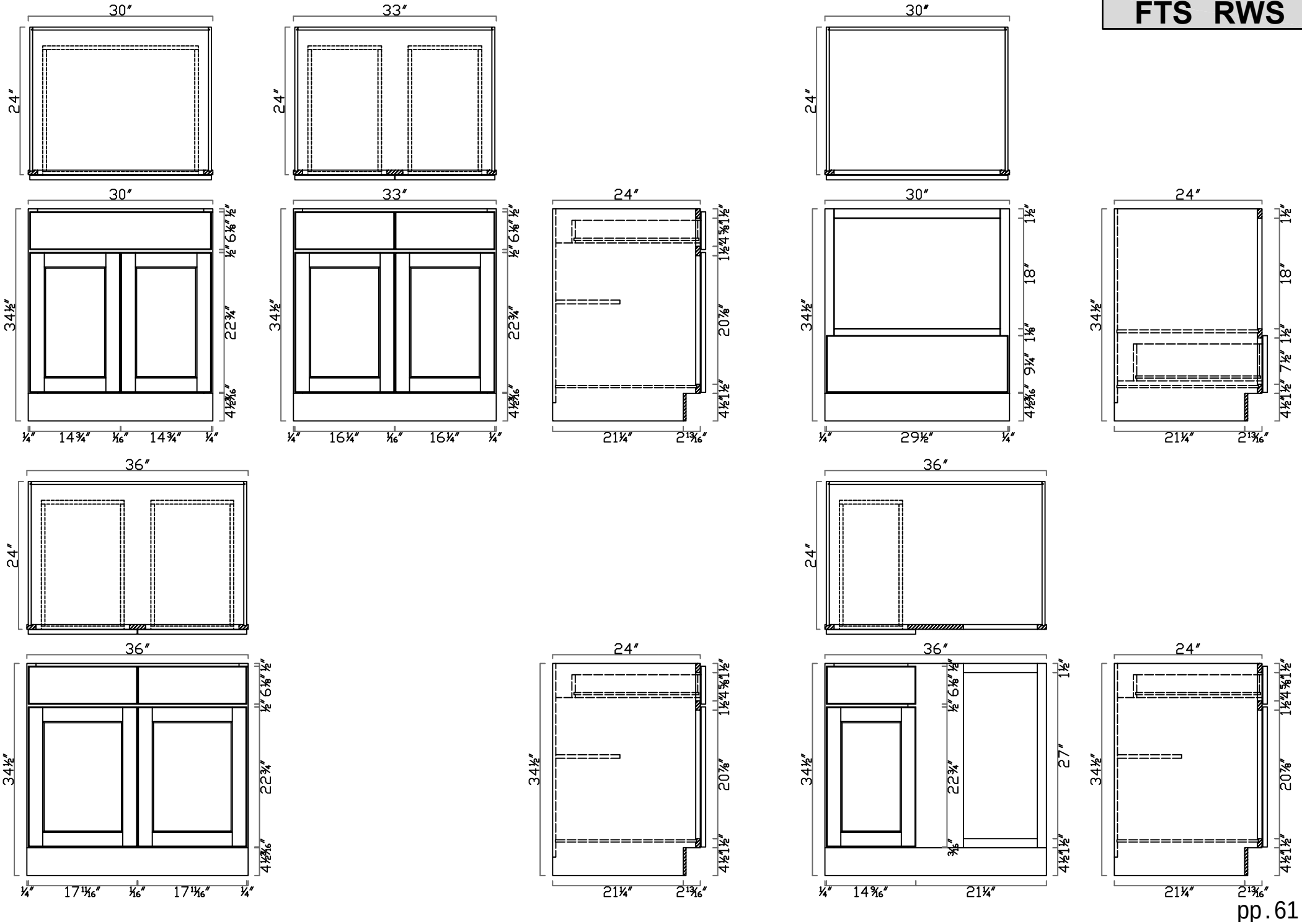

DB15	DB18	DB30
DB21	DB24	DB36

GHI Cabinetry

FTS RWS

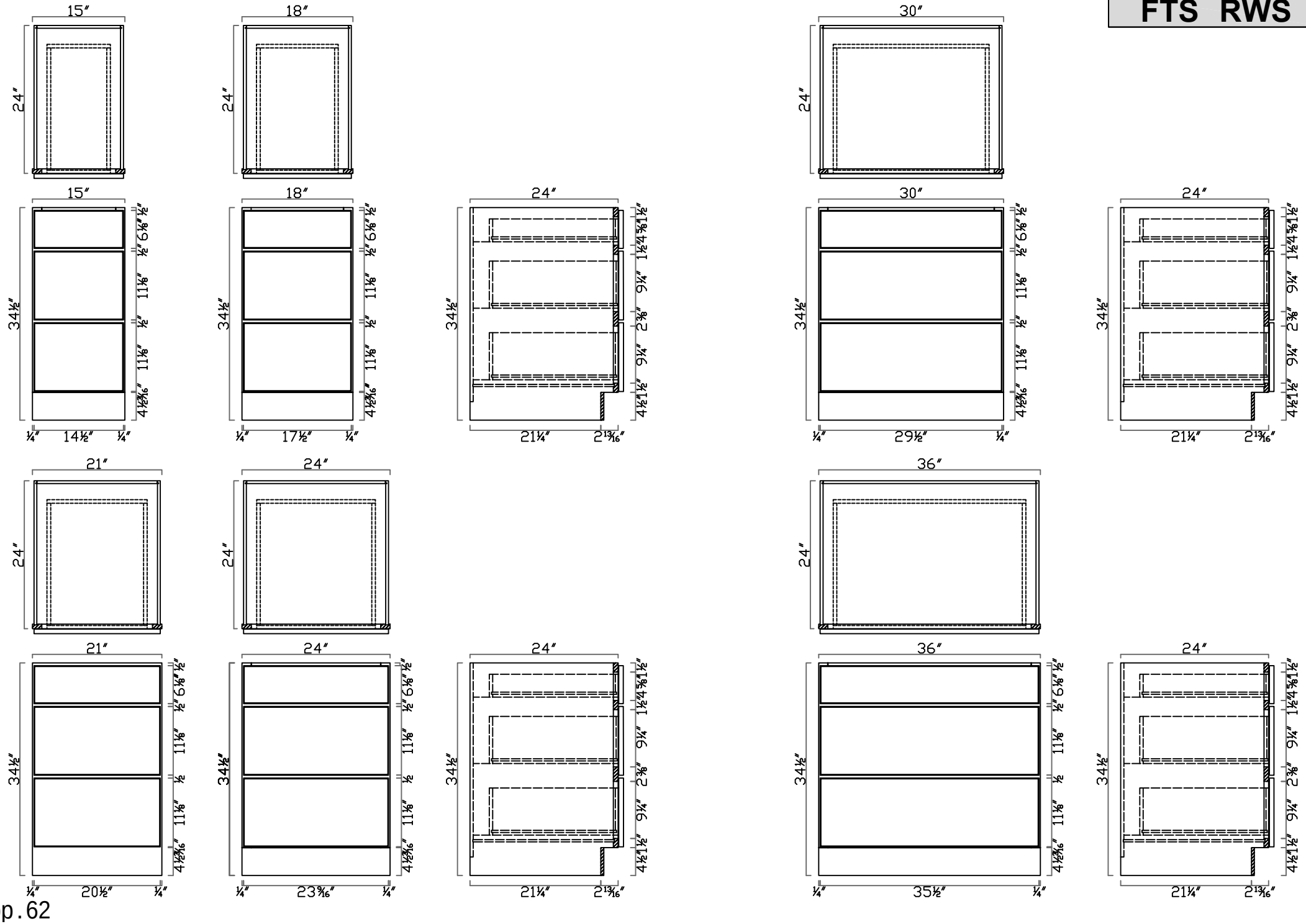

DB24-2	DB30-2	BC24
DCB3612		ER3309

GHI Cabinetry

FTS RWS

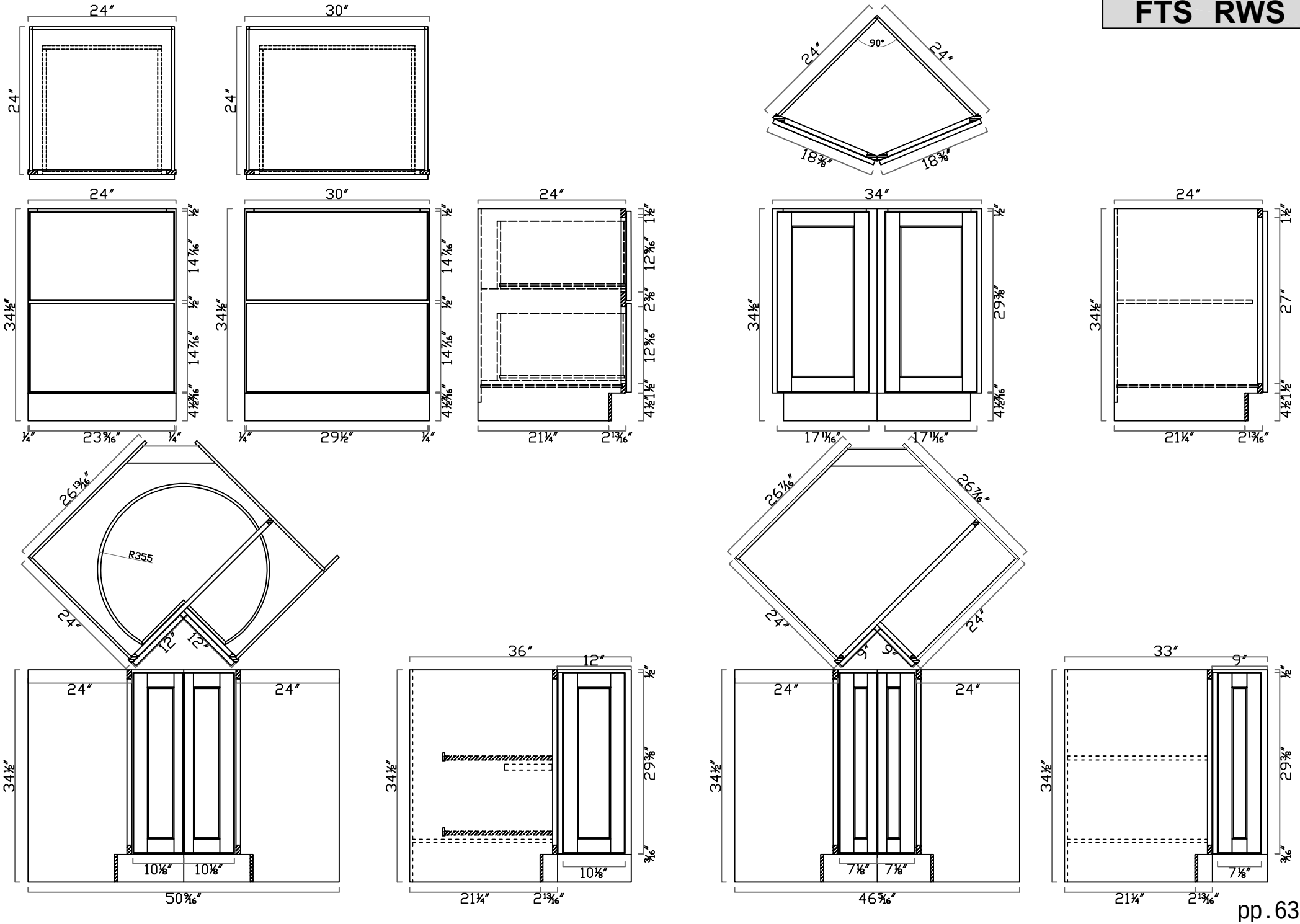

SB30	SB33	FSB36
SB36		SB42

GHI Cabinetry

FTS RWS

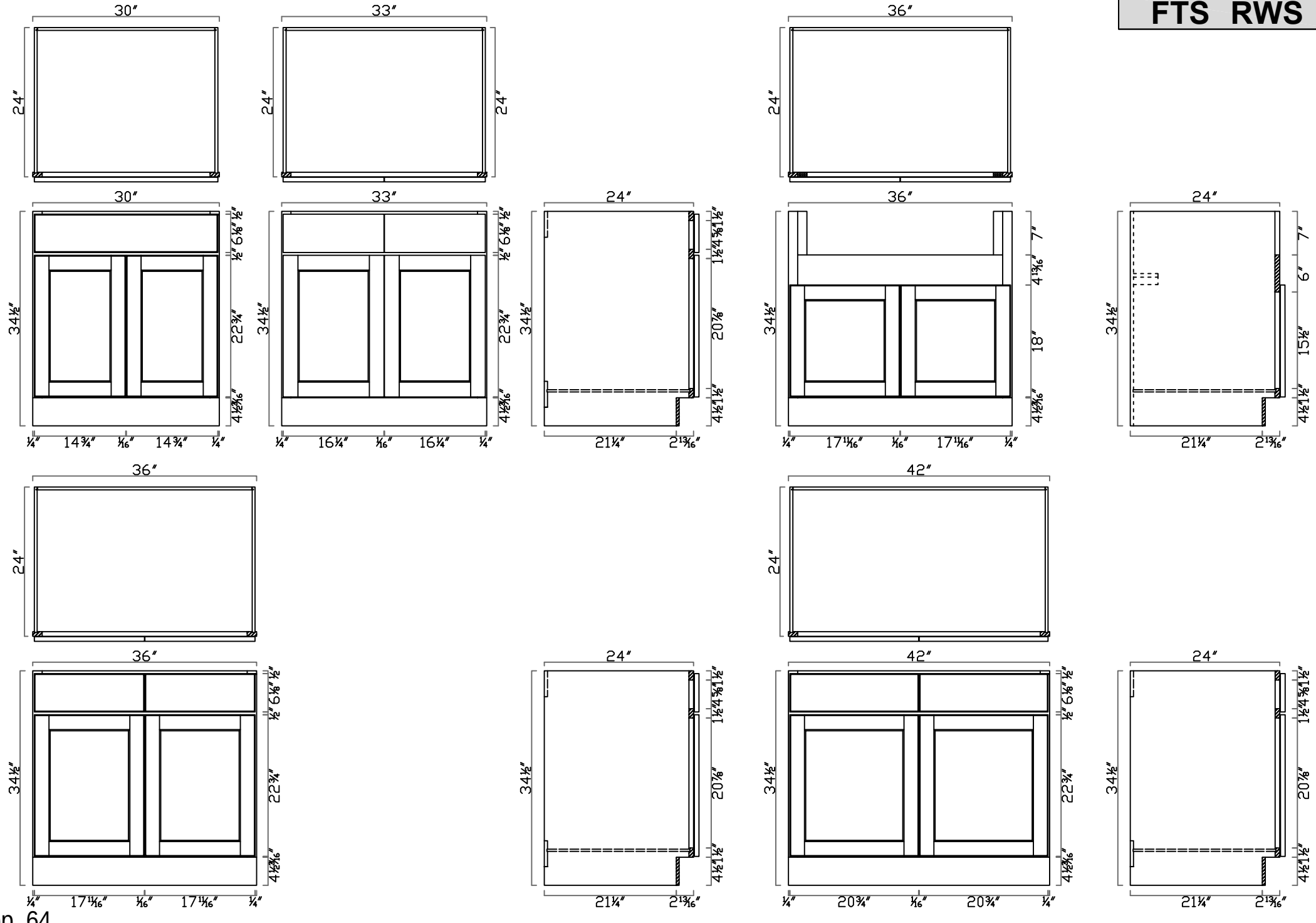

SB60		WP1884	WP2484
UCB1854	UCB2454		

GHI Cabinetry

FTS RWS

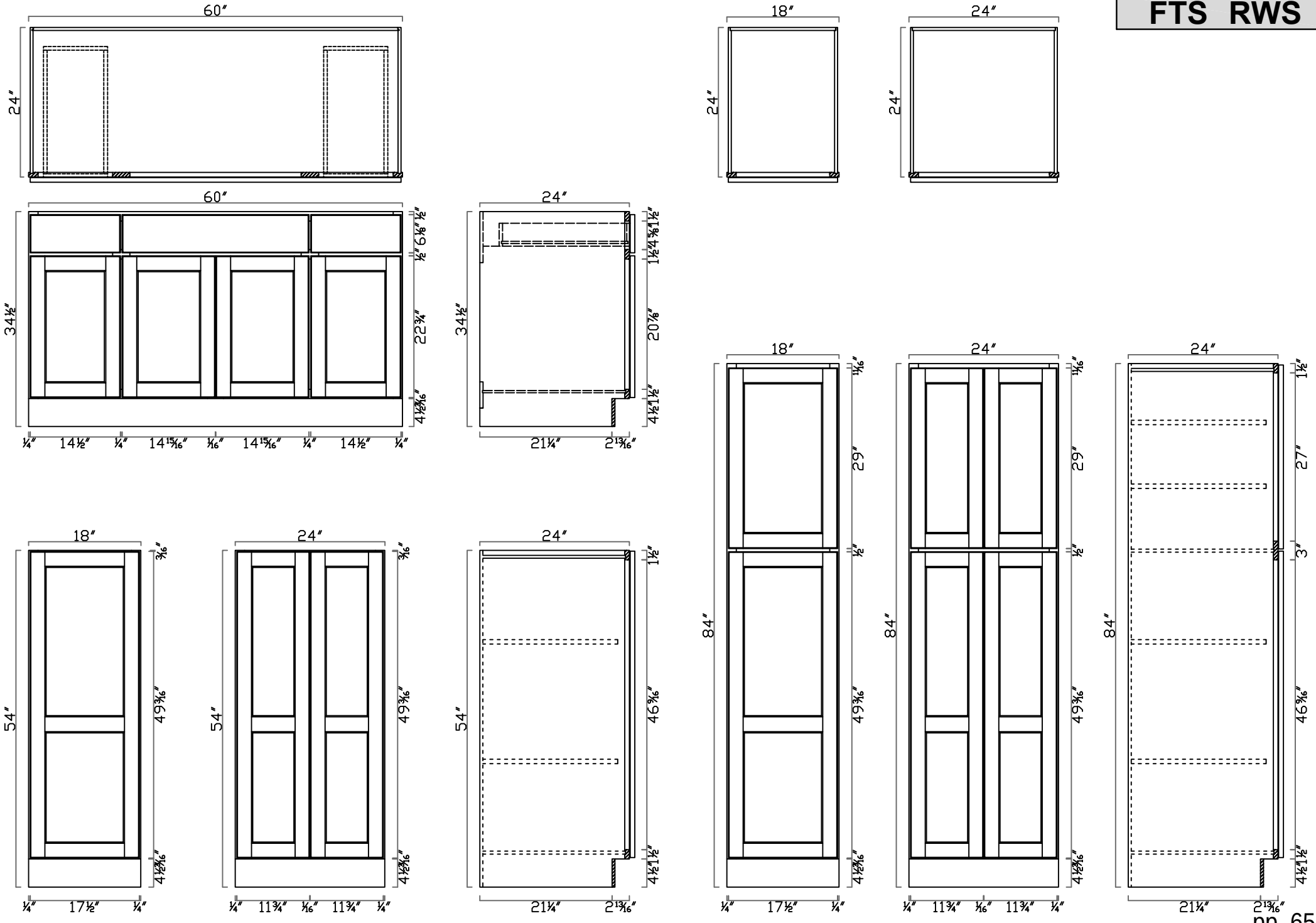

0U332484

0U332490

GHI Cabinetry

FTS RWS

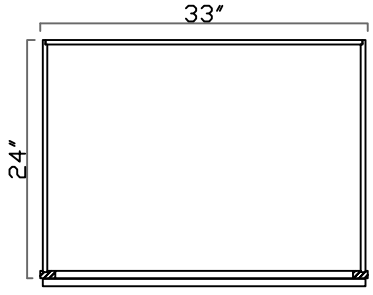

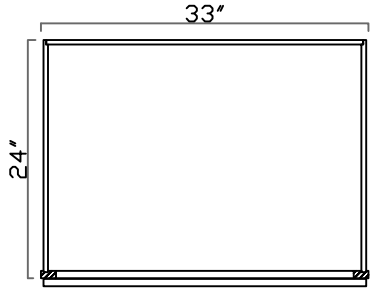

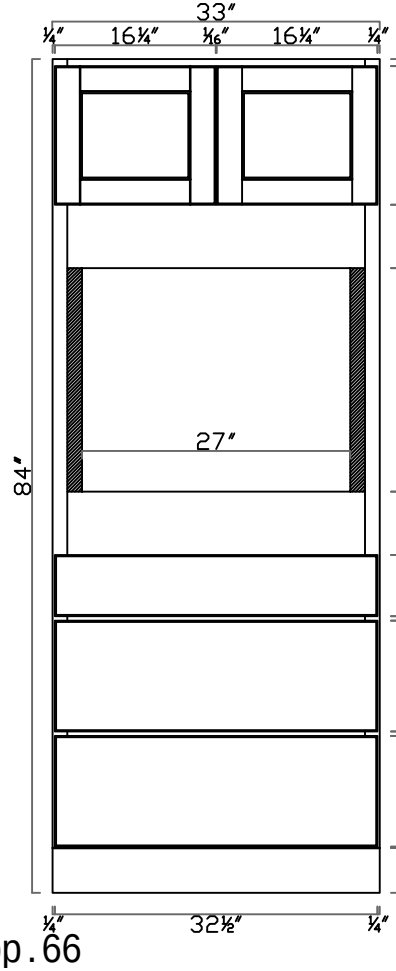

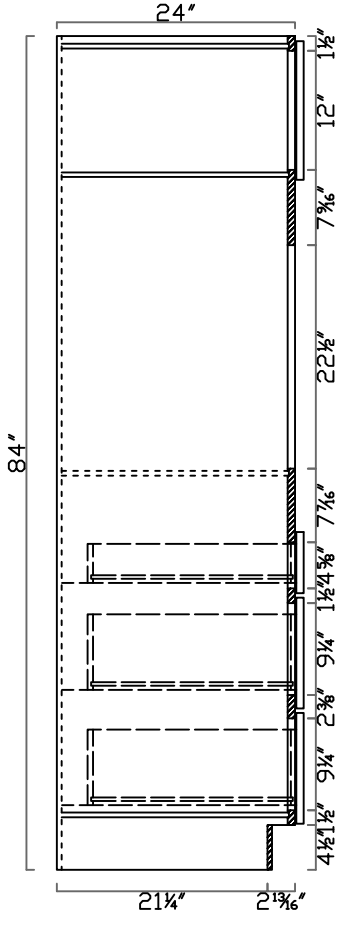

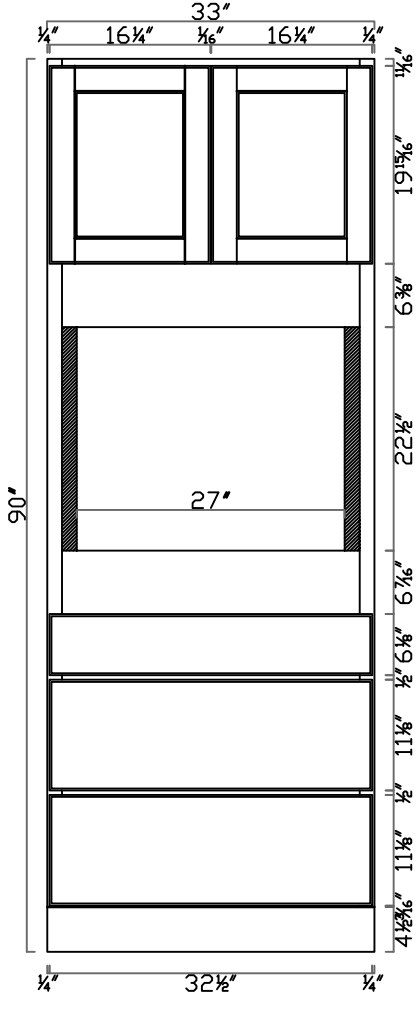

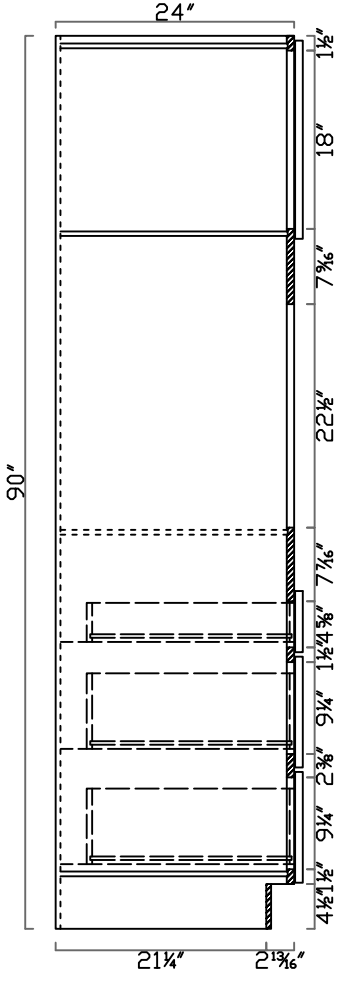

V2421	V3021D	V3621D-L
VDB1221	V3621D-R	V4821D

GHI Cabinetry

FTS RWS

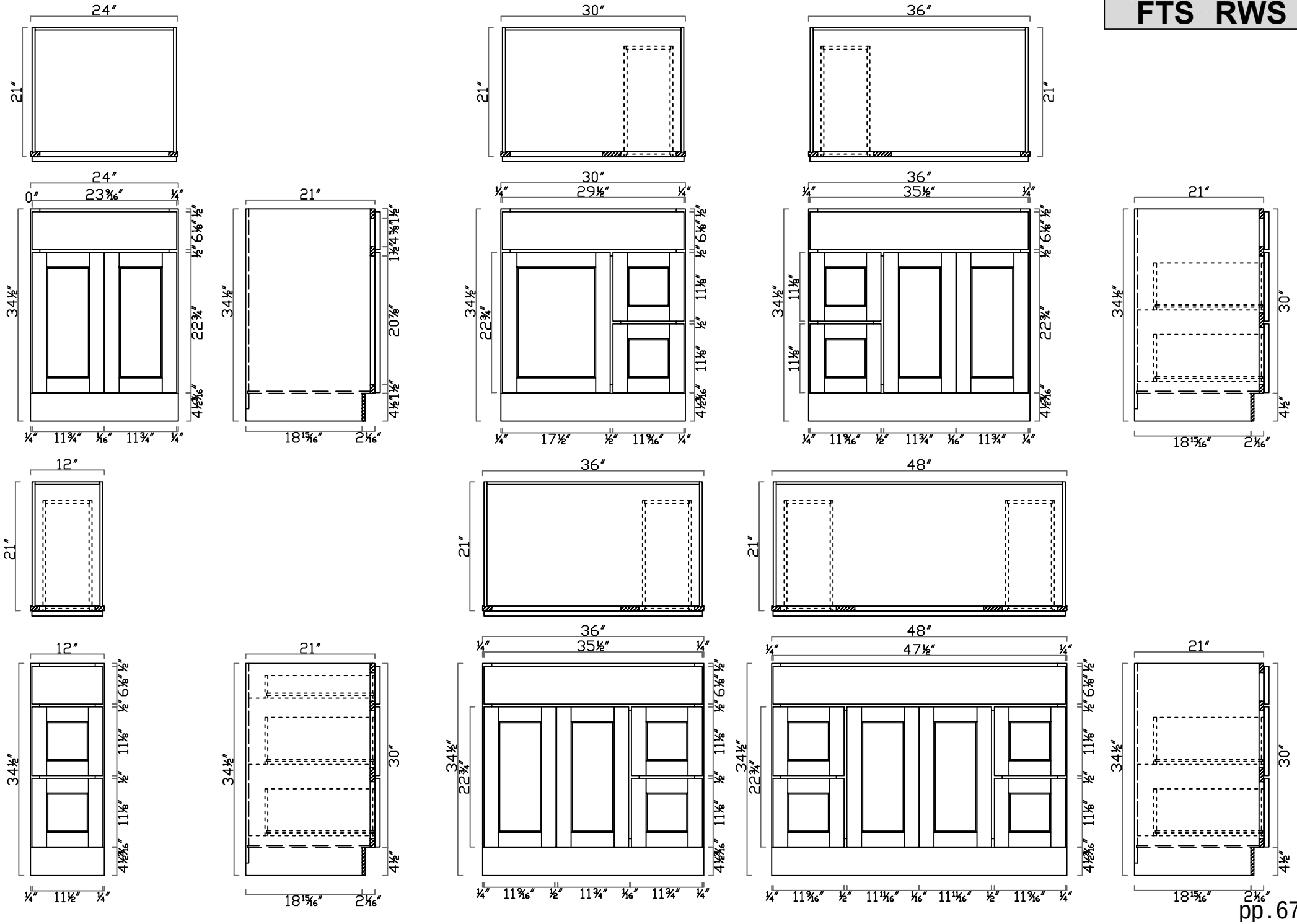

V6021D		M3030	M3630	
V1816	V2418	BV2126	L781821	

GHI Cabinetry

FTS RWS

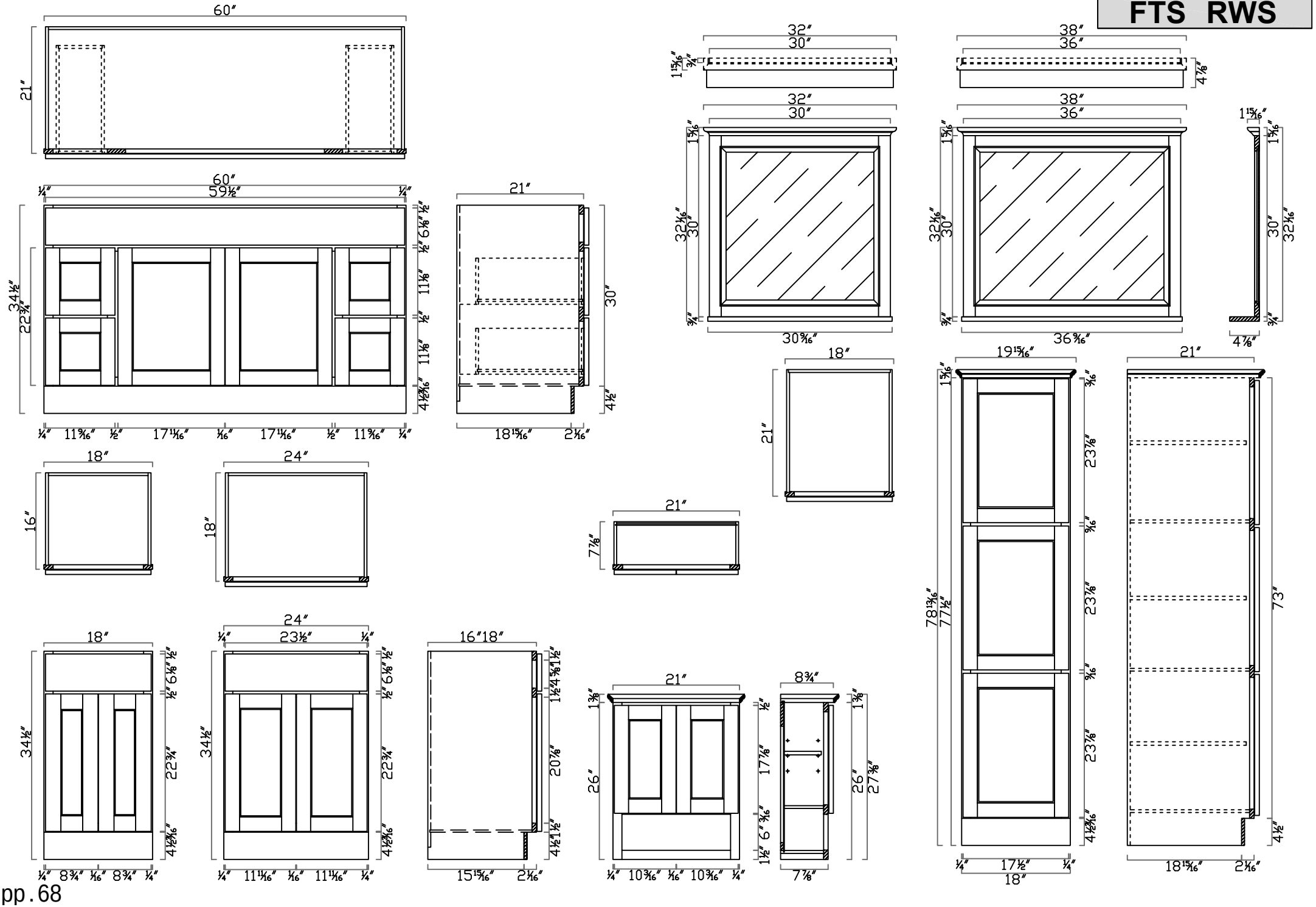

W0915	W1215	W1515	W1815	W2115	W2415
W2715		W3015	W3315		W3615

GHI Cabinetry

SNS SNW

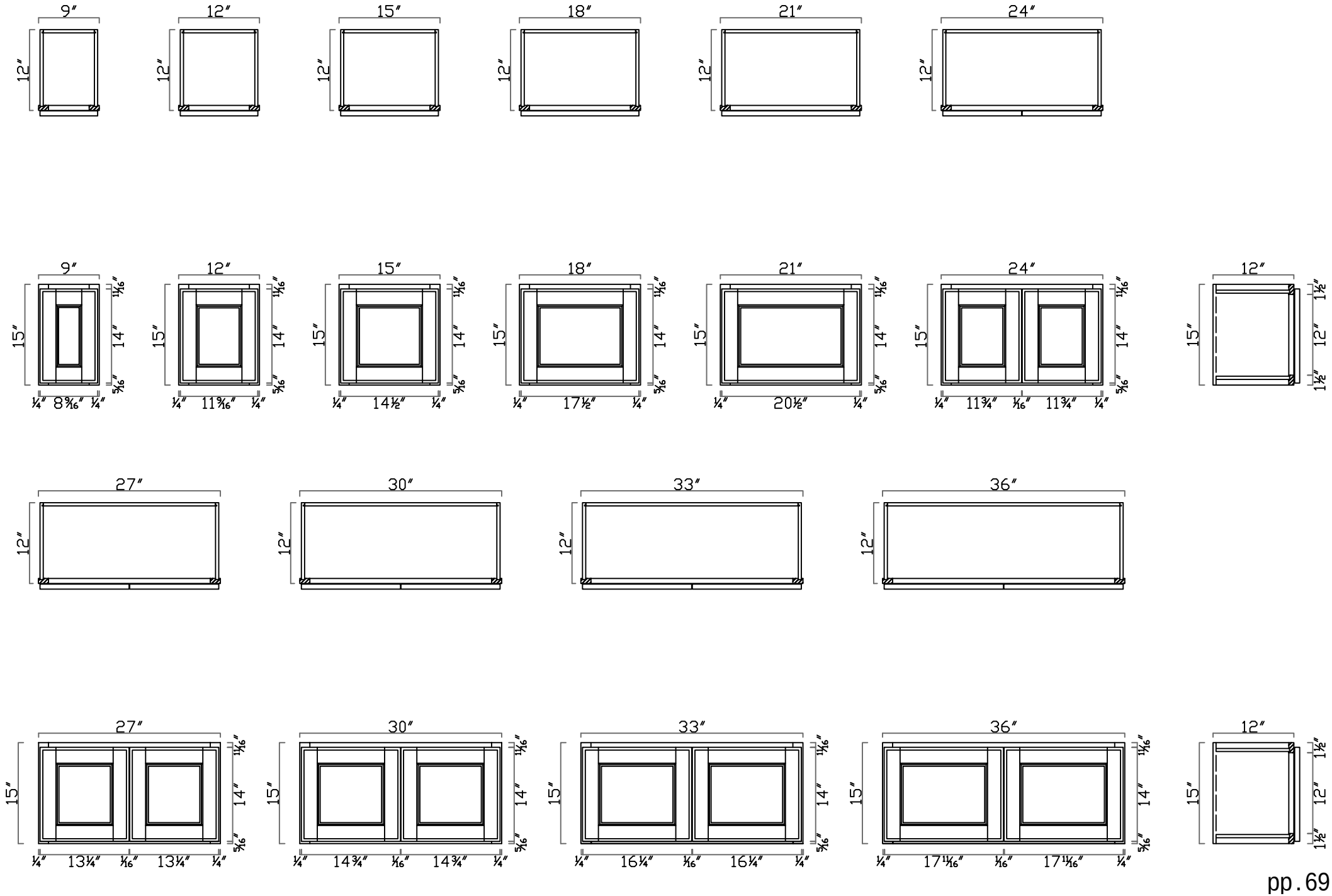

W0930	W1230	W1530	W1830	W2130	W2430
W0936	W1236	W1536	W1836	W2136	W2436
W0942	W1242	W1542	W1842	W2142	W2442

GHI Cabinetry

SNS SNW

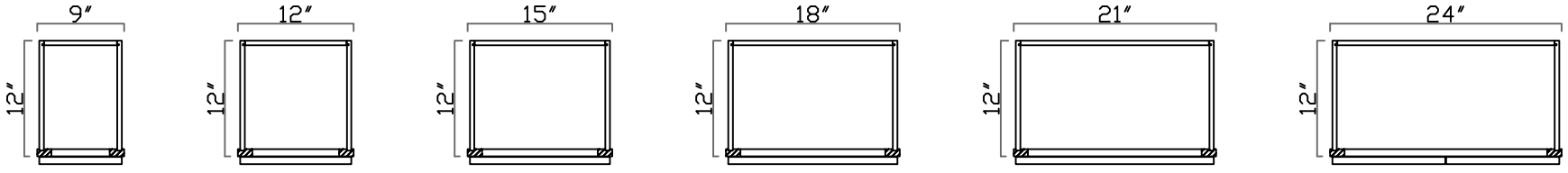

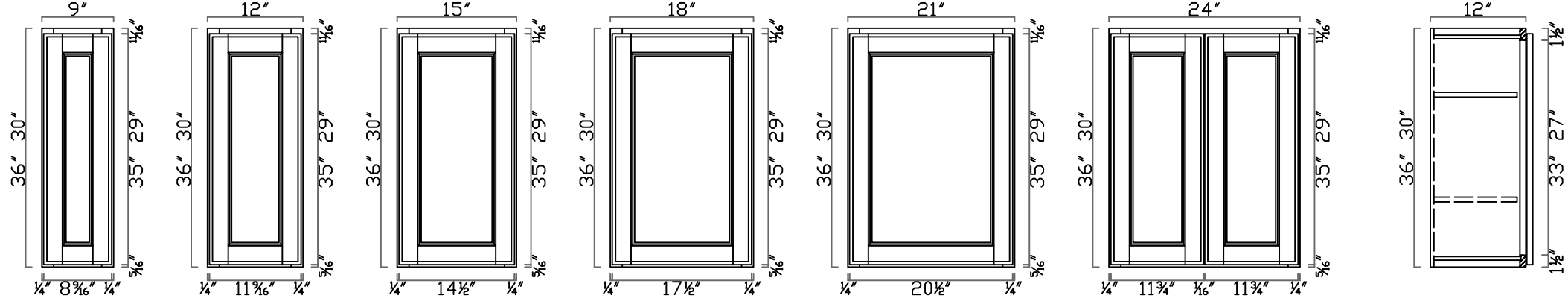

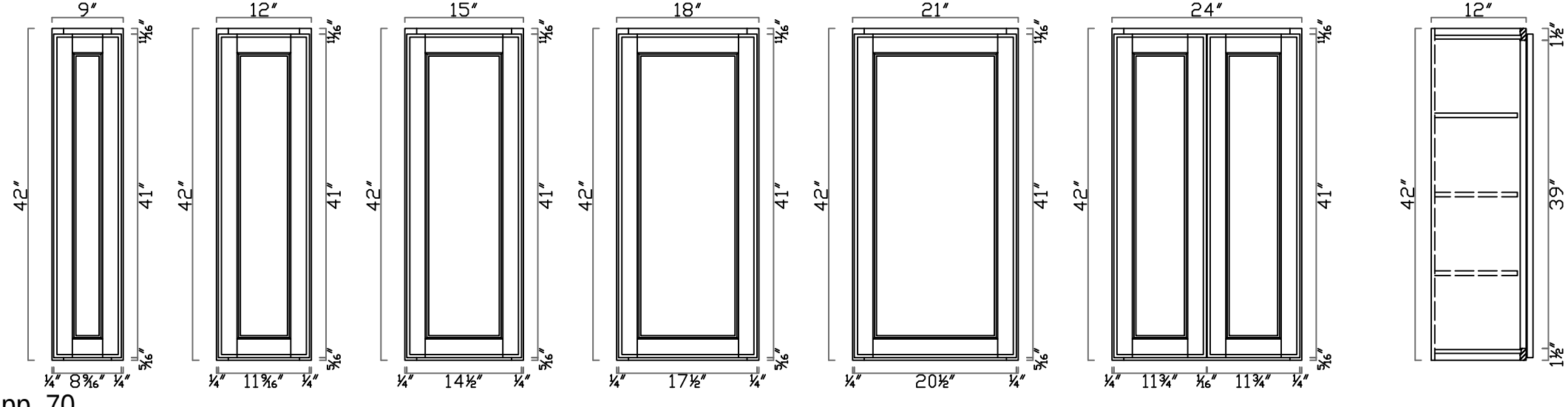

W2730	W3030	W3330	W3630
W2736	W3036	W3336	W3636
W2742	W3042	W3342	W3642

GHI Cabinetry

SNS SNW

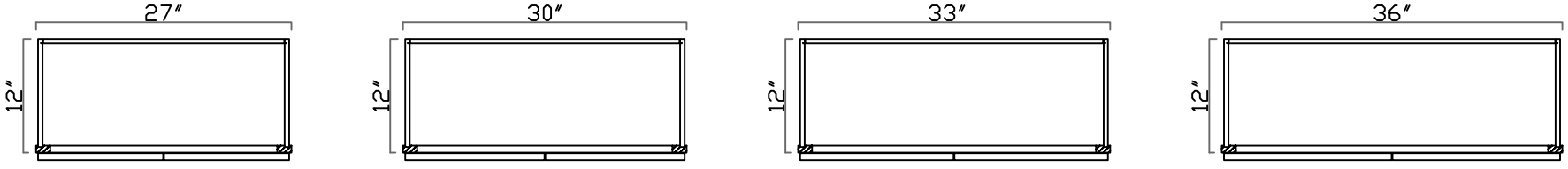

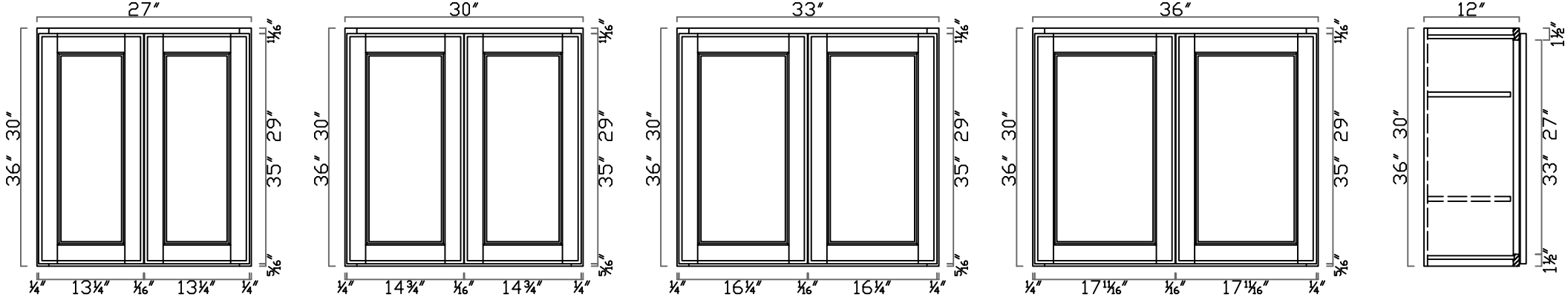

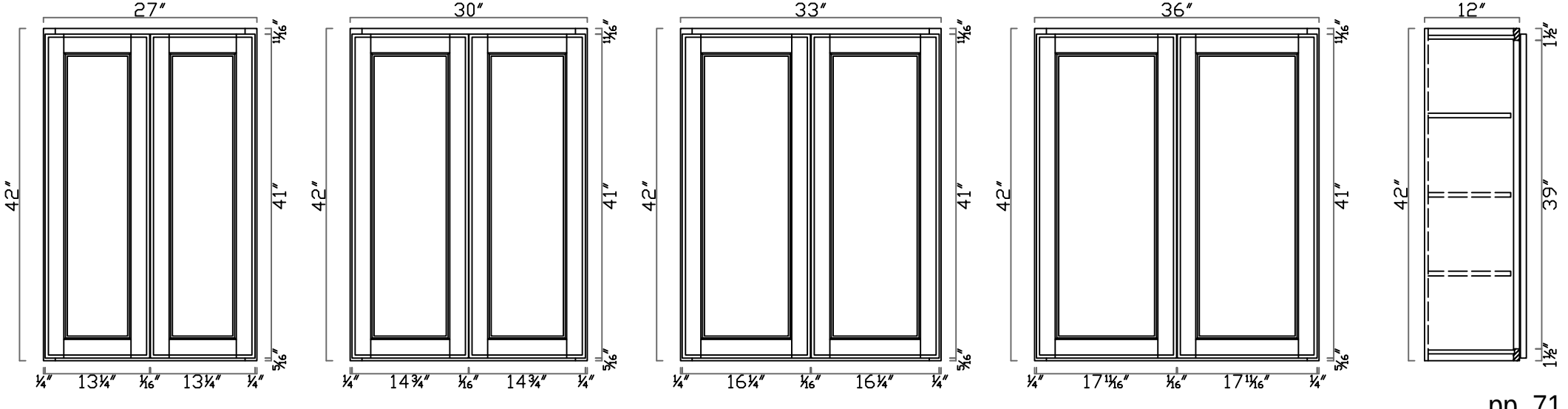

WAC2430	WBC2730	WDC2430
WAC2436		WDC2436
WAC2442		WDC2442

GHI Cabinetry

SNS SNW

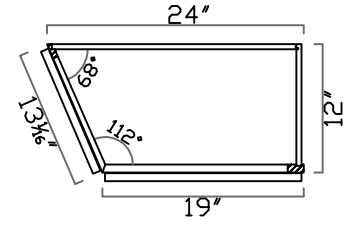

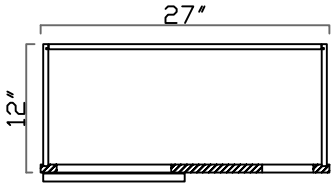

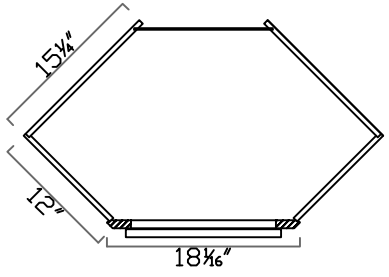

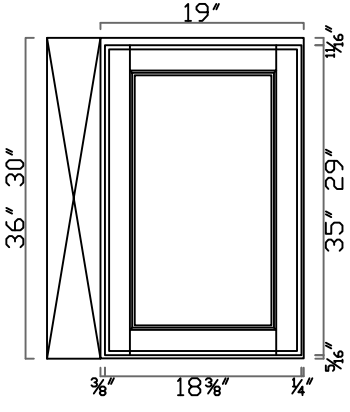

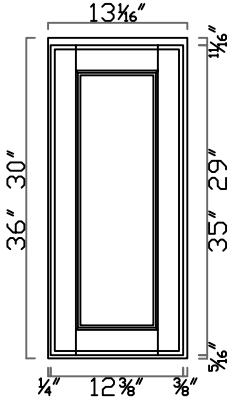

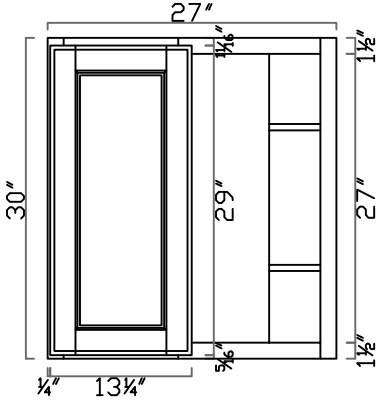

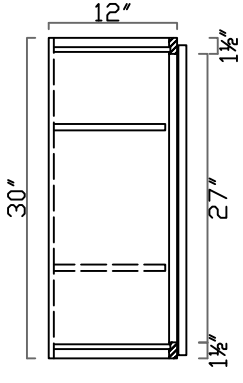

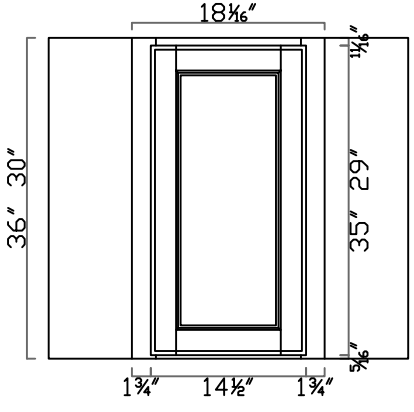

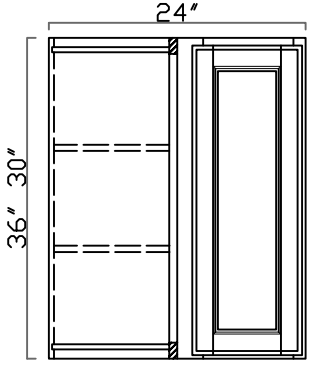

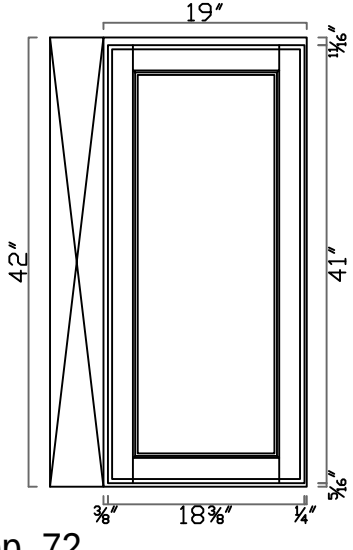

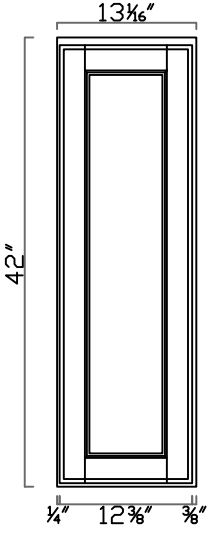

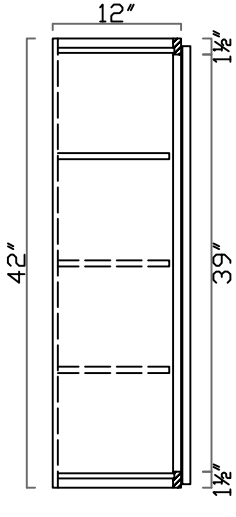

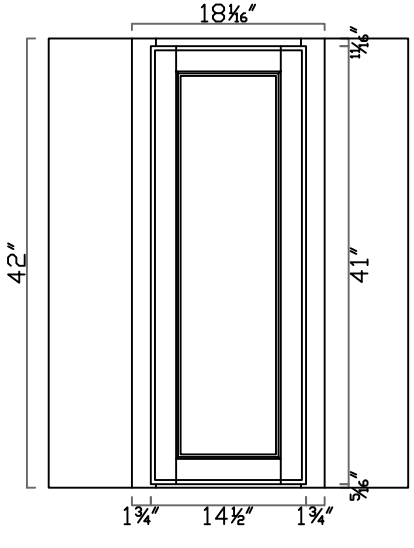

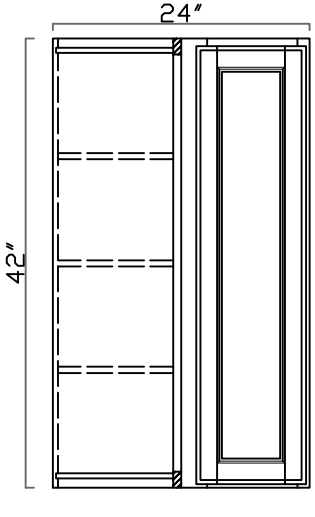

WDC2736	W3012	W3015	W3612	W3615
WDC2742	W3018	W3024	W3618	W3624

GHI Cabinetry

SNS SNW

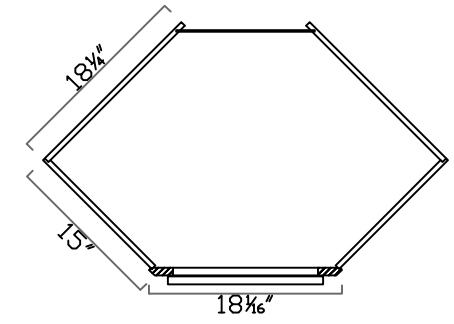

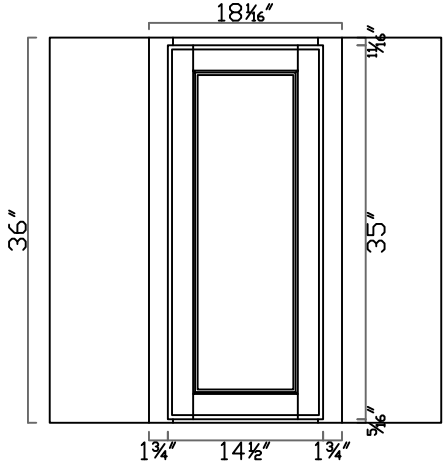

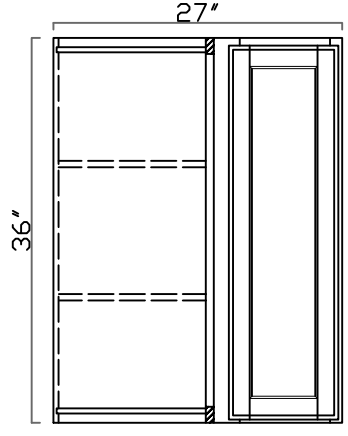

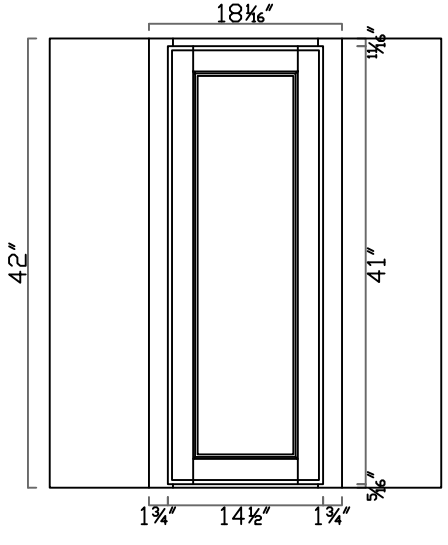

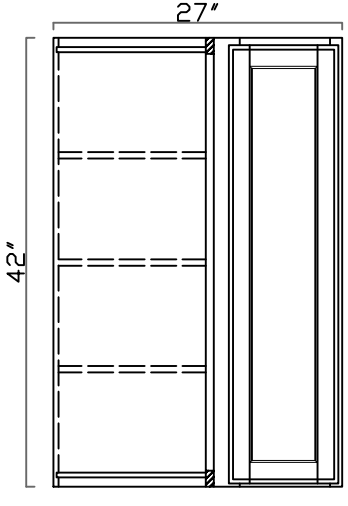

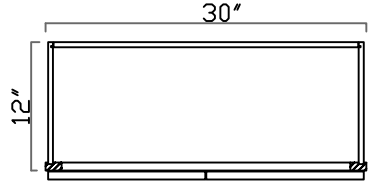

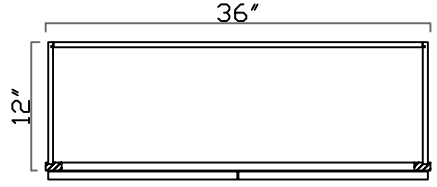

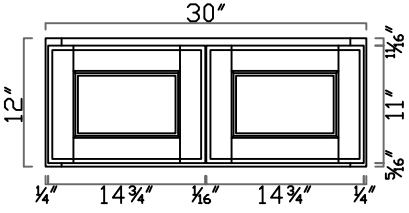

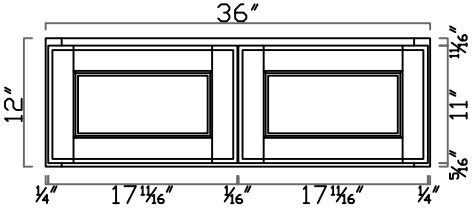

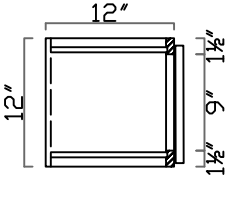

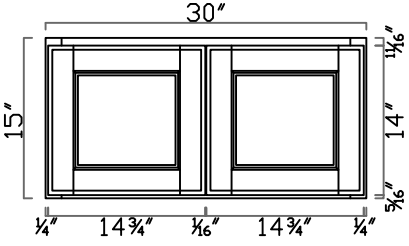

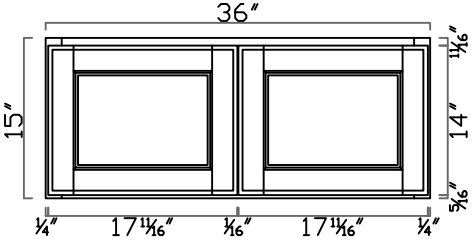

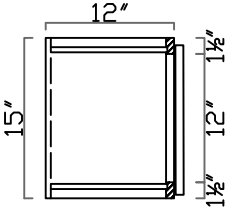

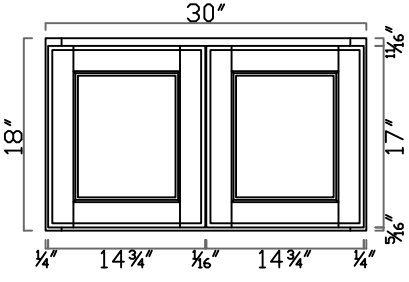

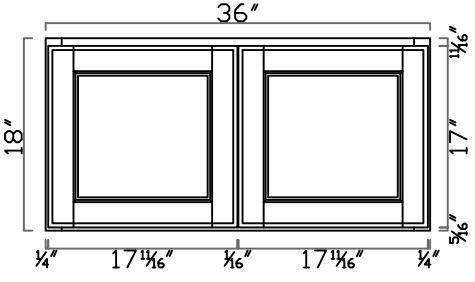

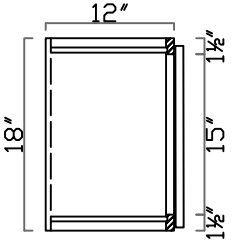

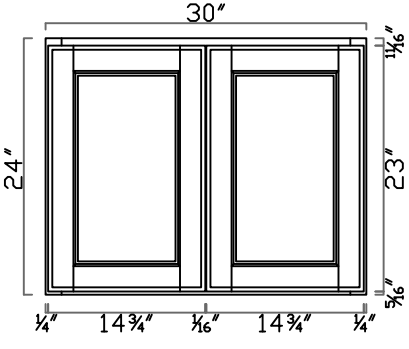

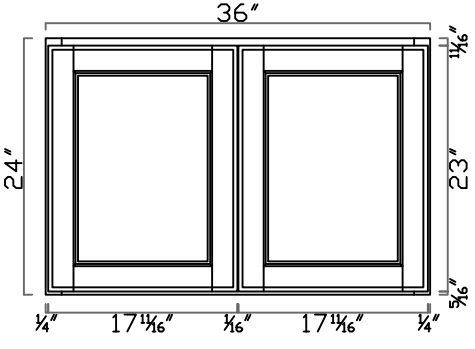

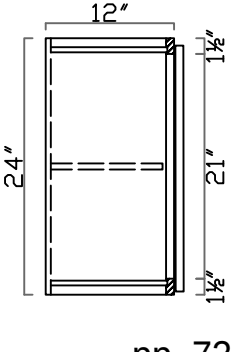

WDC2415	W3315	W183624	W243624
W331224	W361224	W184224	W244224
W331524	W361524		

GHI Cabinetry

SNS SNW

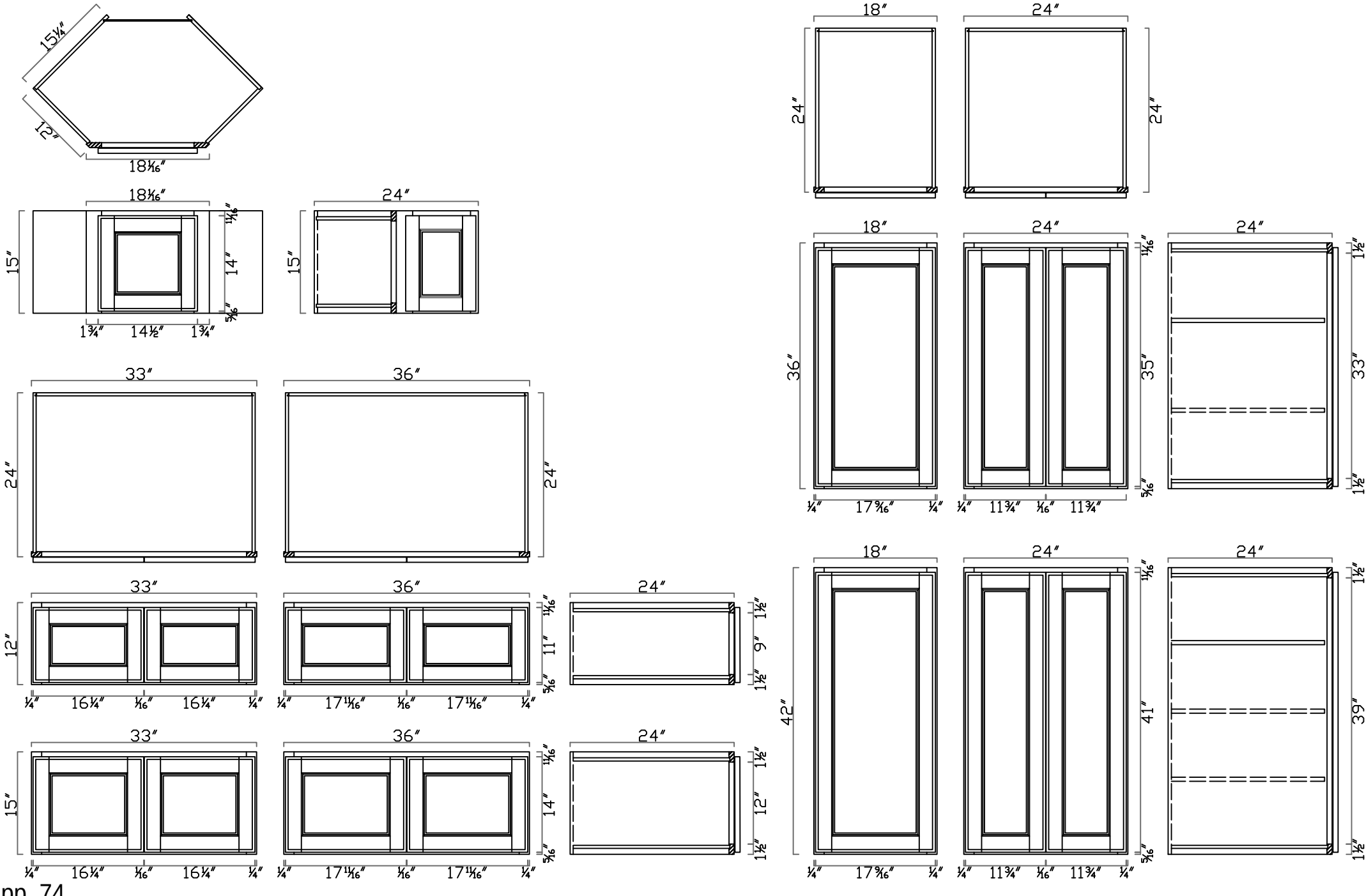

W361824		MC3018	
W332424	W362424	RP3015	WR3015
		WR1818	Floating sheif

GHI Cabinetry

SNS SNW

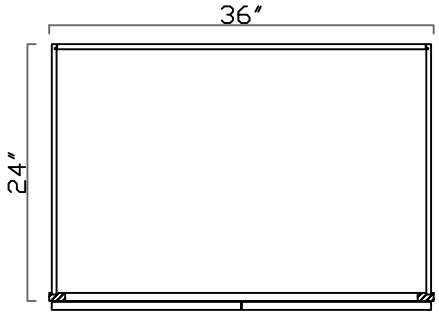

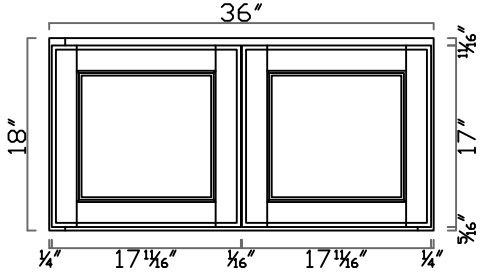

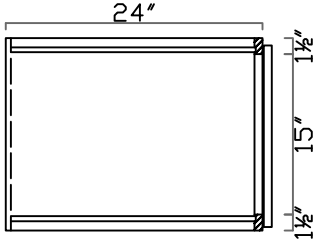

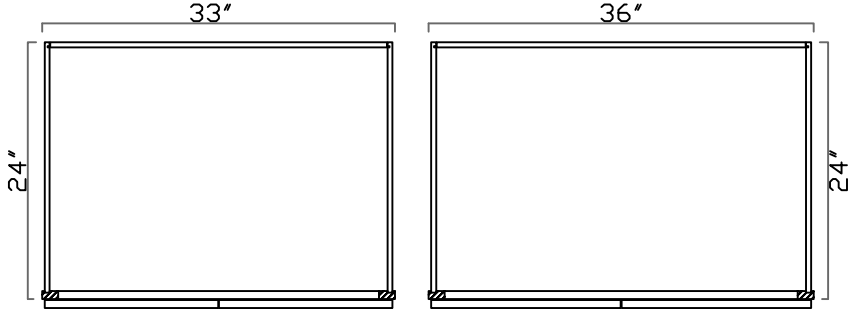

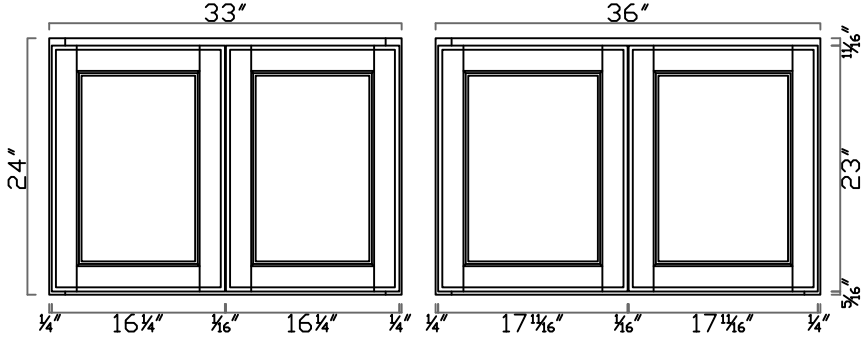

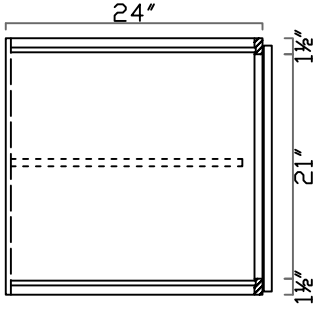

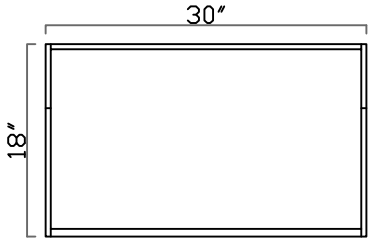

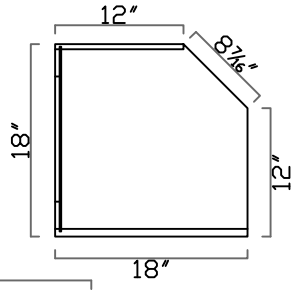

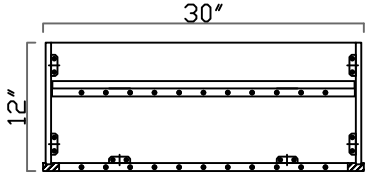

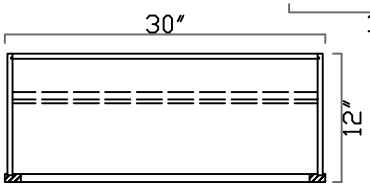

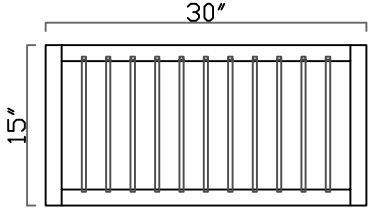

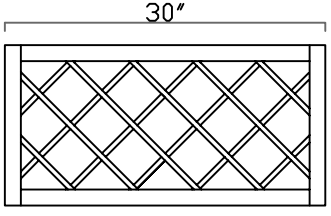

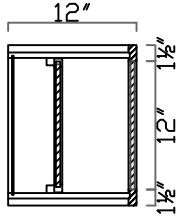

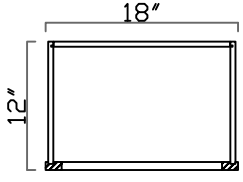

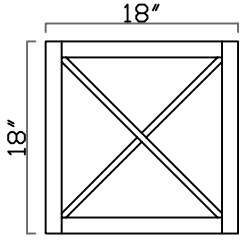

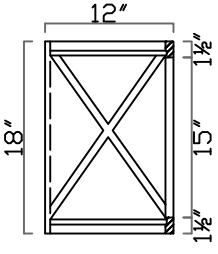

Floating sheif 30" Floating sheif 36"

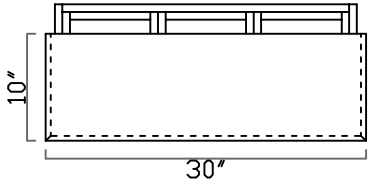

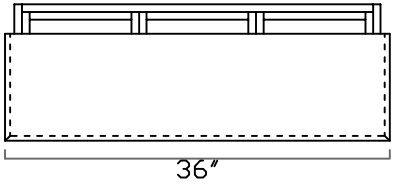

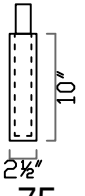

B09 (FH)	B18 (FH)	B18	B21
B12	B15	B24	B27

GHI Cabinetry

SNS SNW

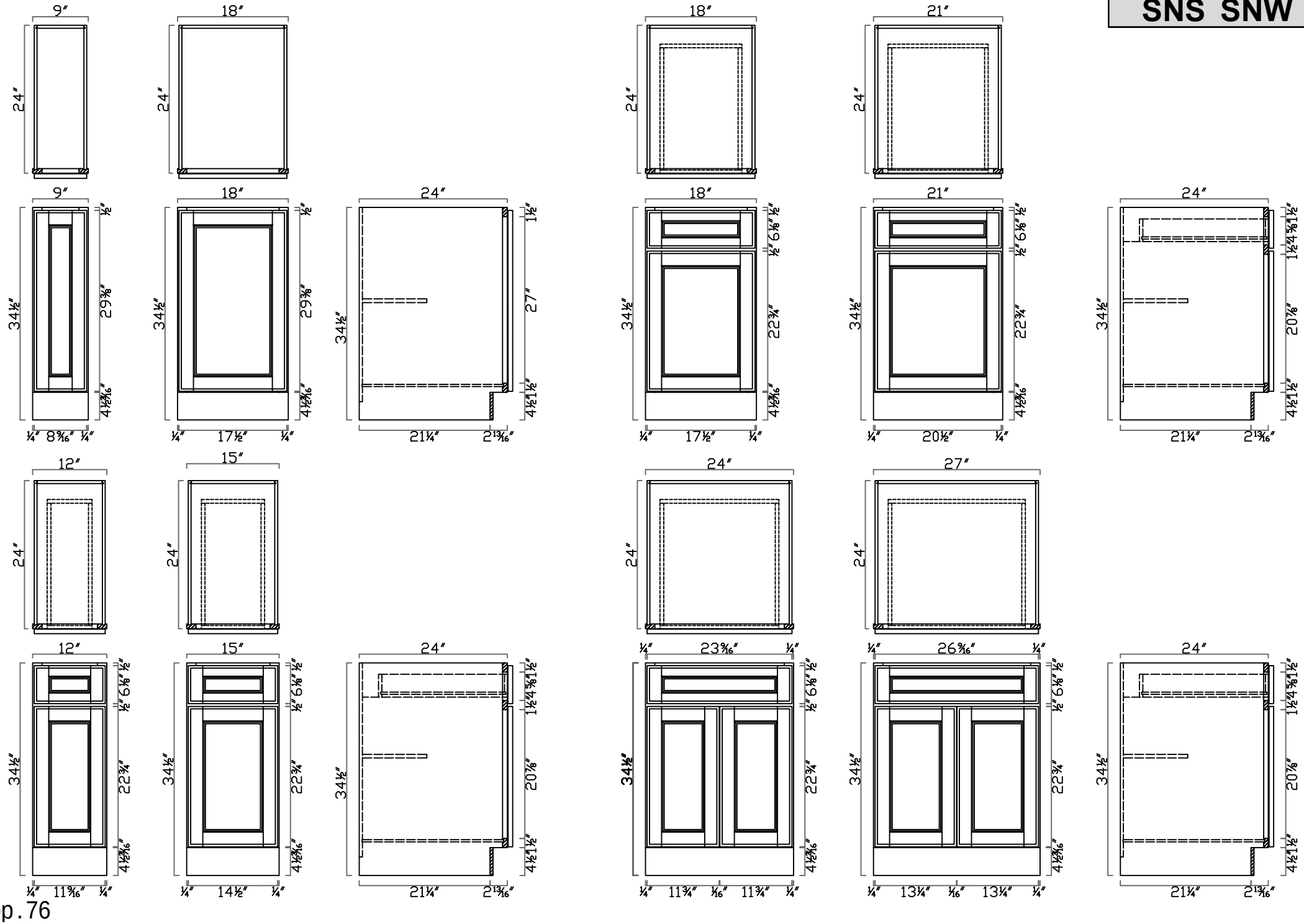

B30	B33	MB30
B36		BBC42-45

GHI Cabinetry

SNS SNW

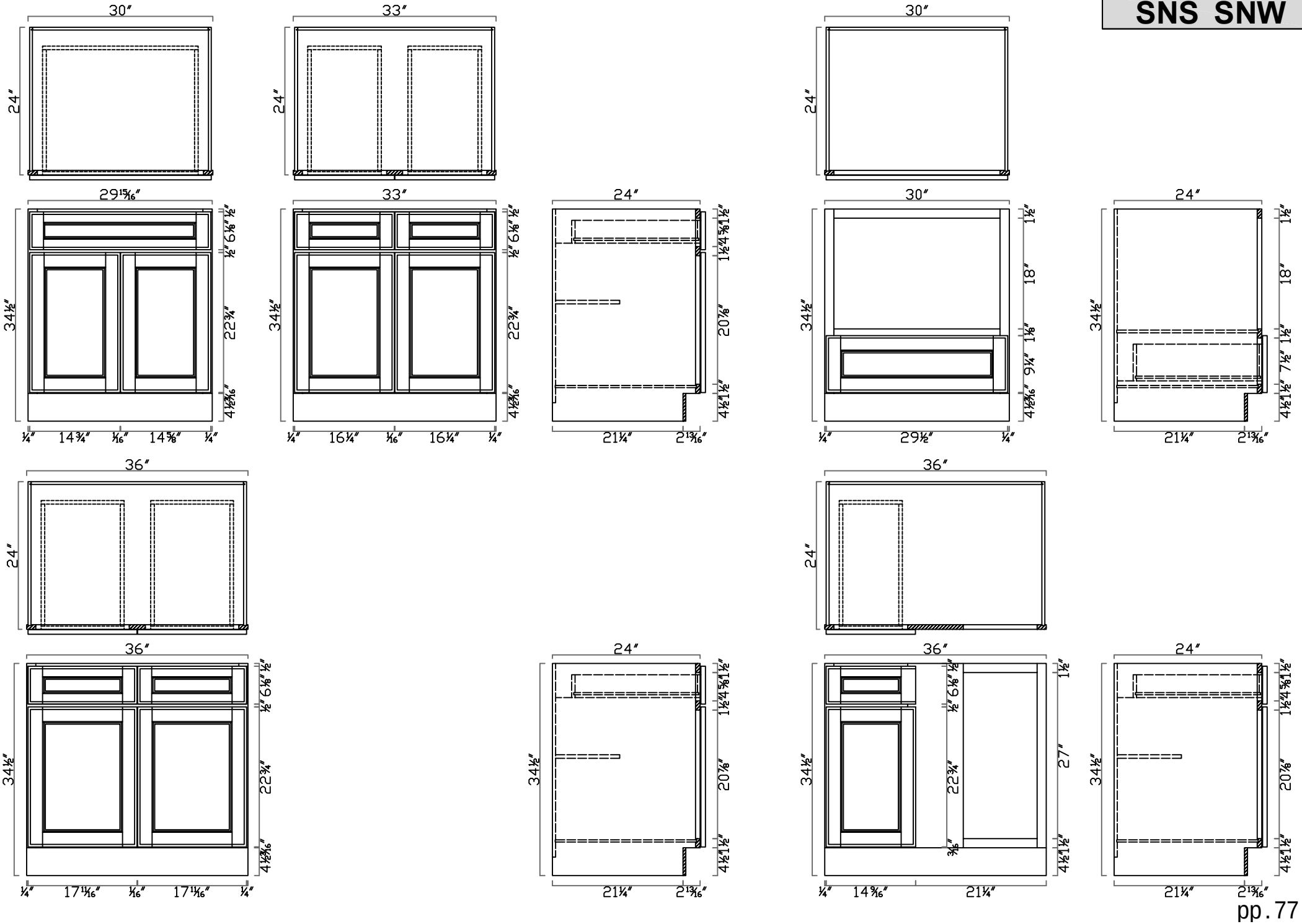

DB15	DB18	DB30
DB21	DB24	DB36

GHI Cabinetry

SNS SNW

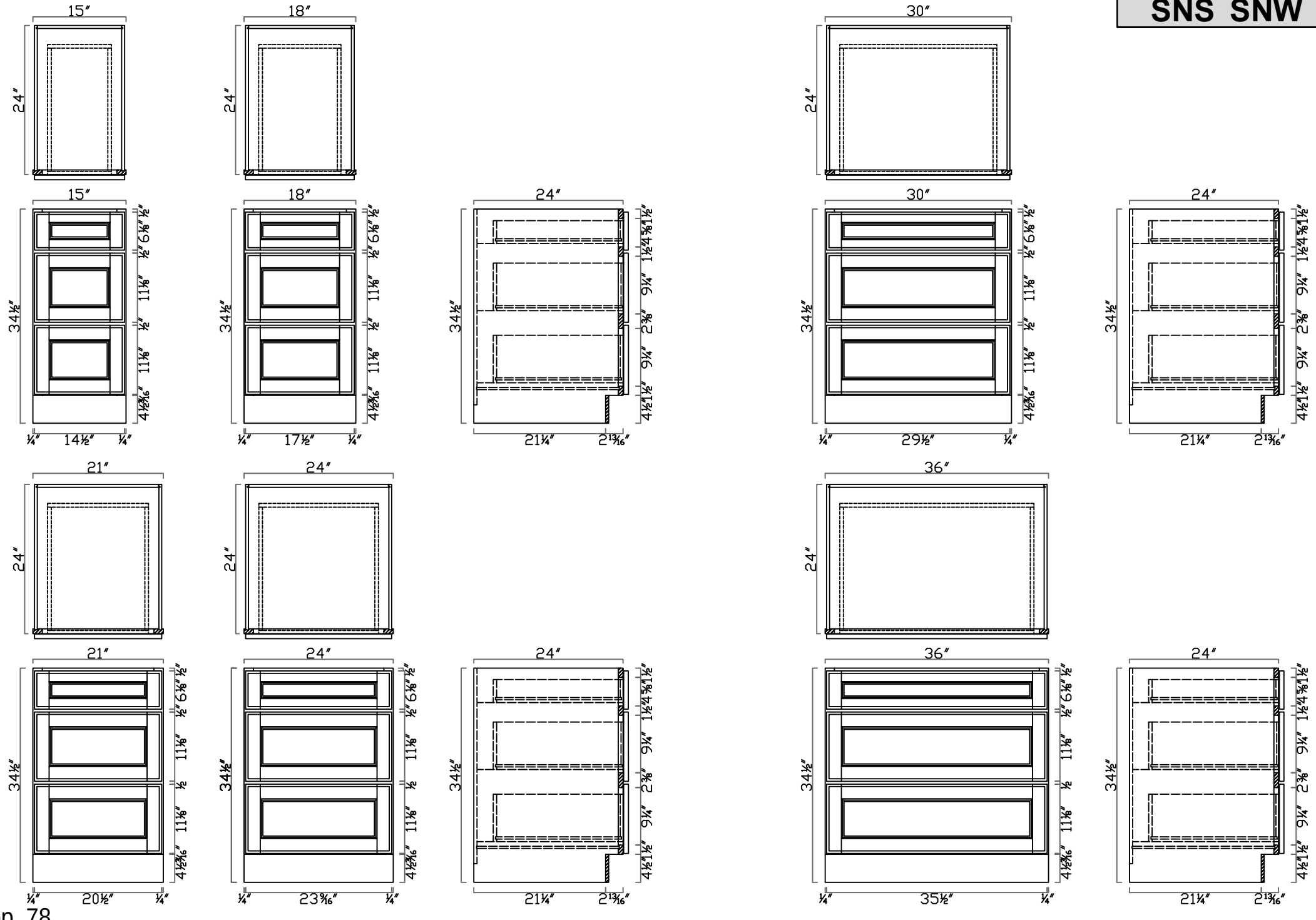

DB24-2	DB30-2	BC24
DCB3612		ER3309

GHI Cabinetry

SNS SNW

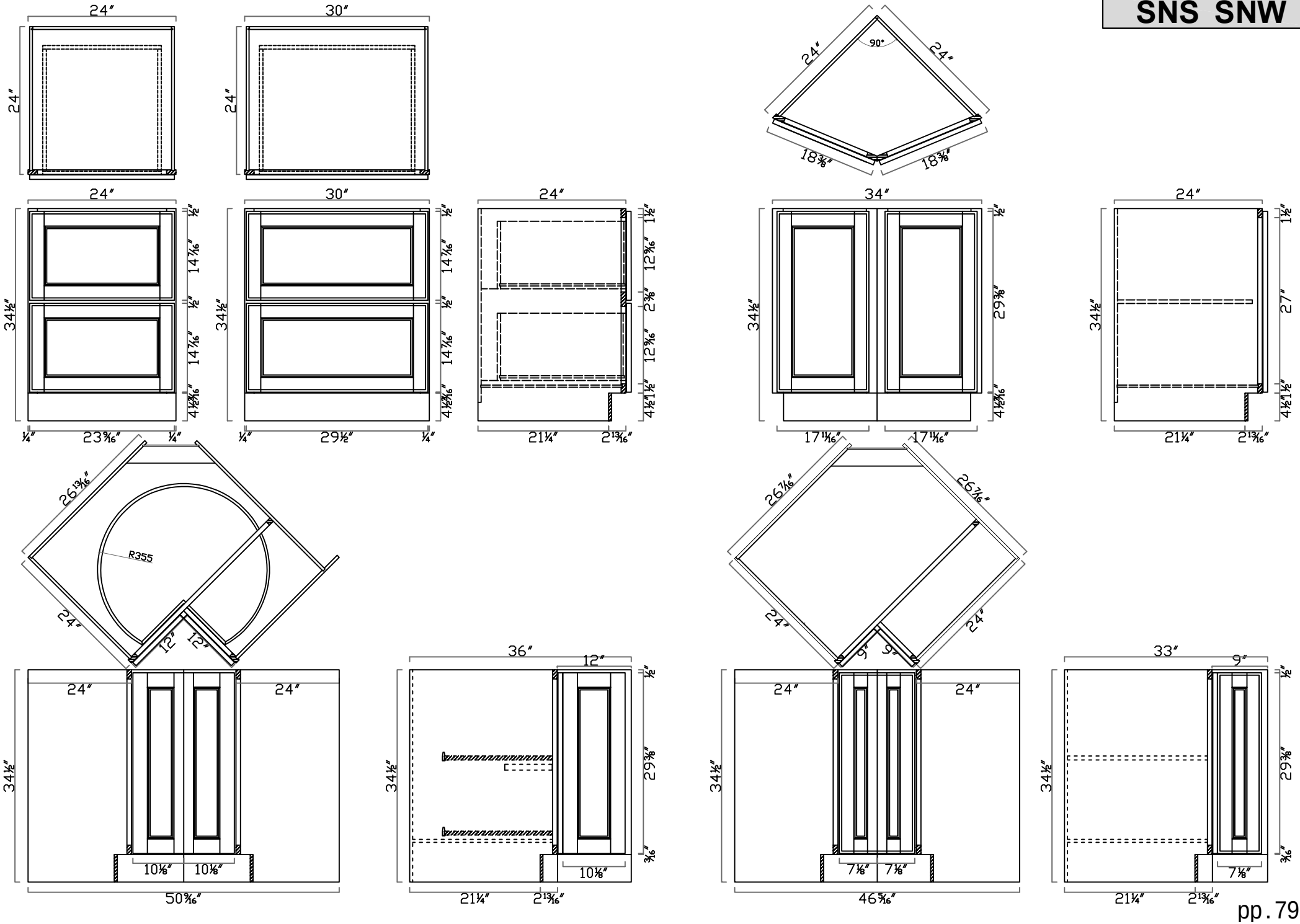

SB30	SB33	FSB36
SB36		SB42

GHI Cabinetry

SNS SNW

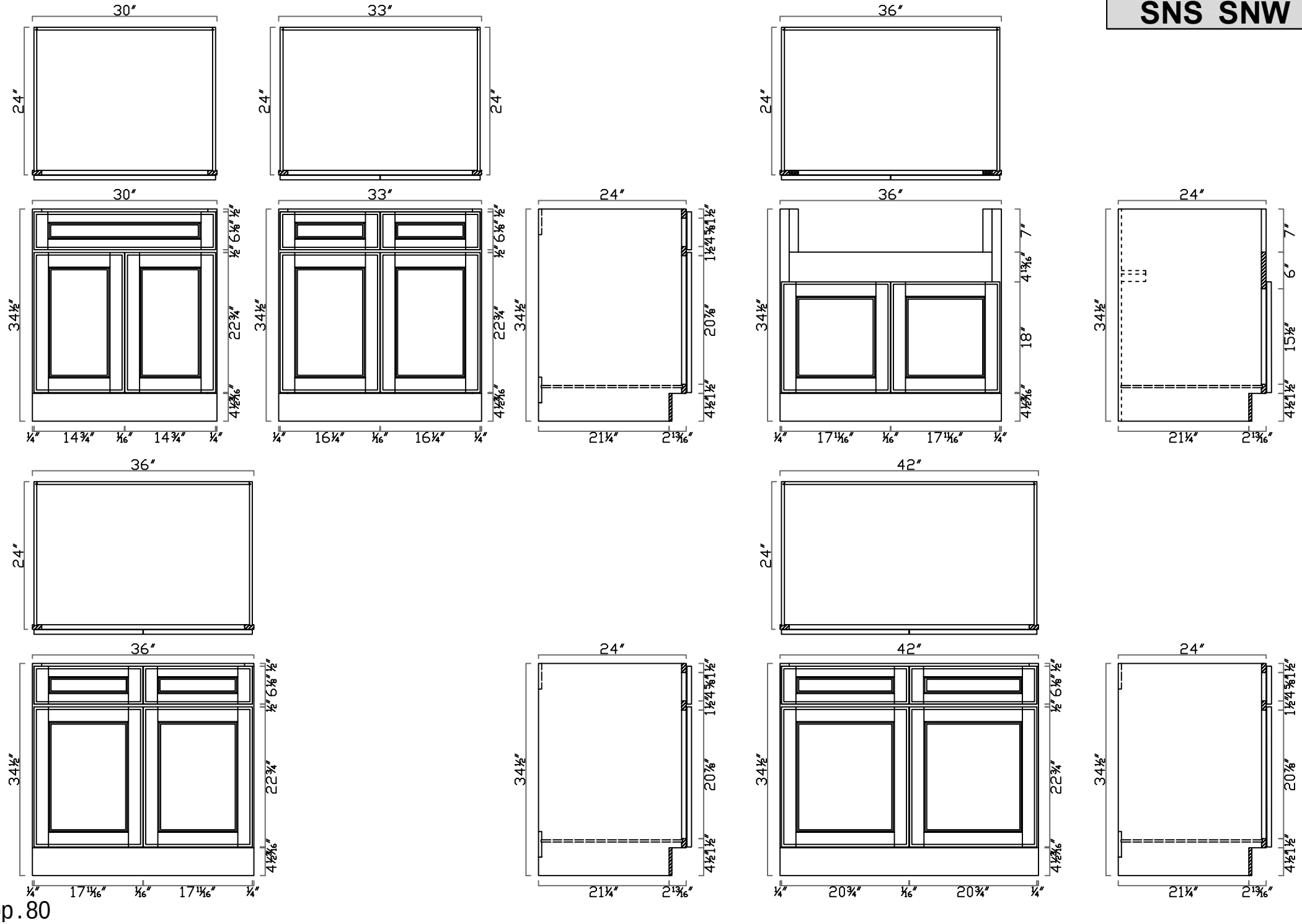

SB60		WP1884	WP2484
UCB1854	UCB2454		

GHI Cabinetry

SNS SNW

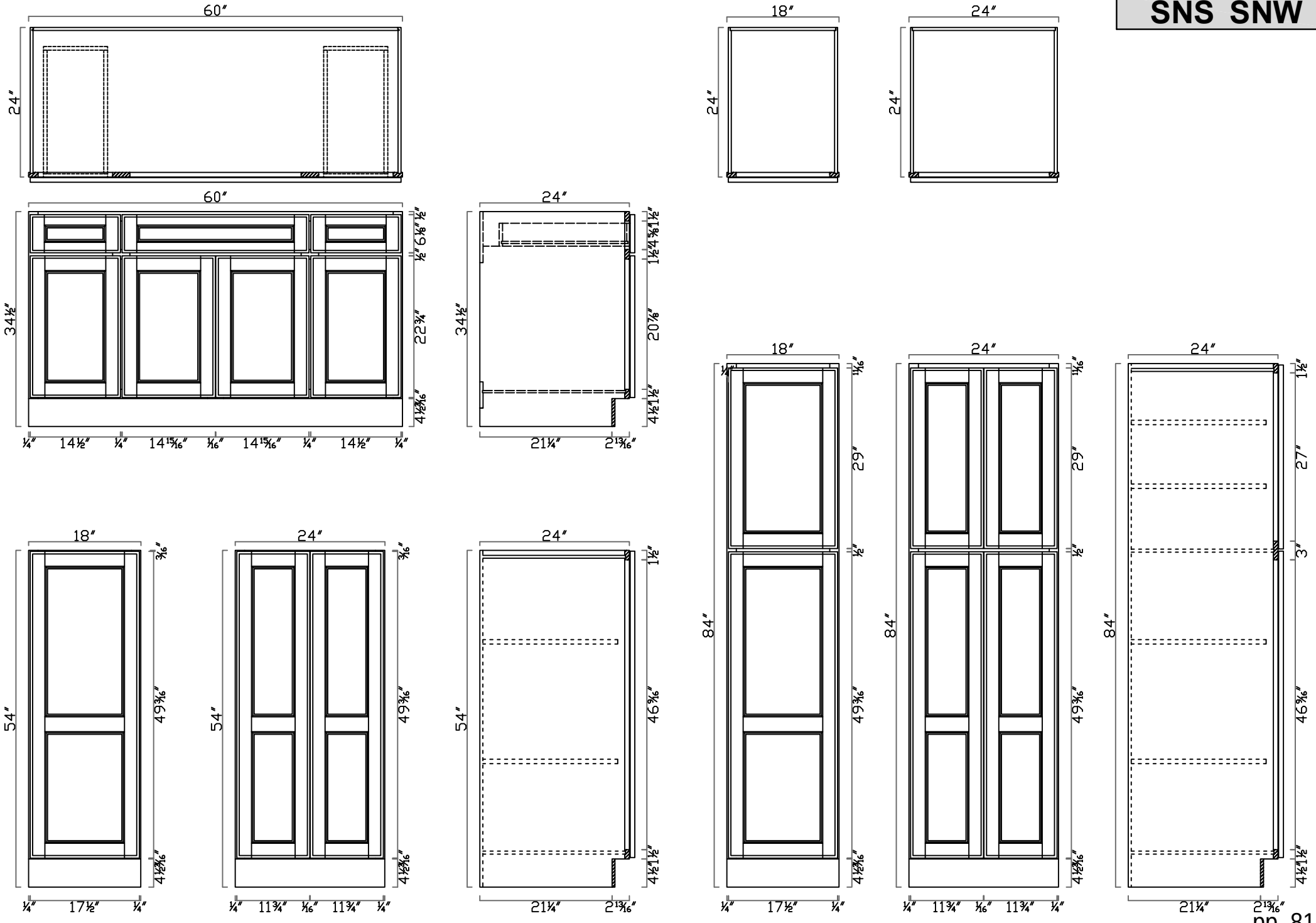

0U332484

0U332490

GHI Cabinetry

SNS SNW

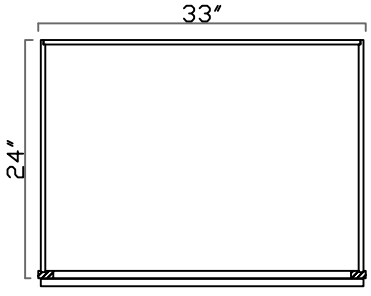

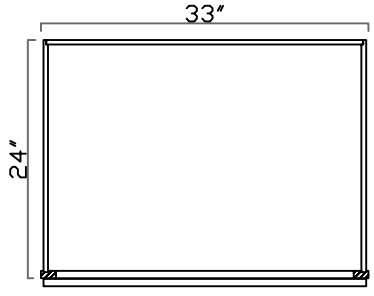

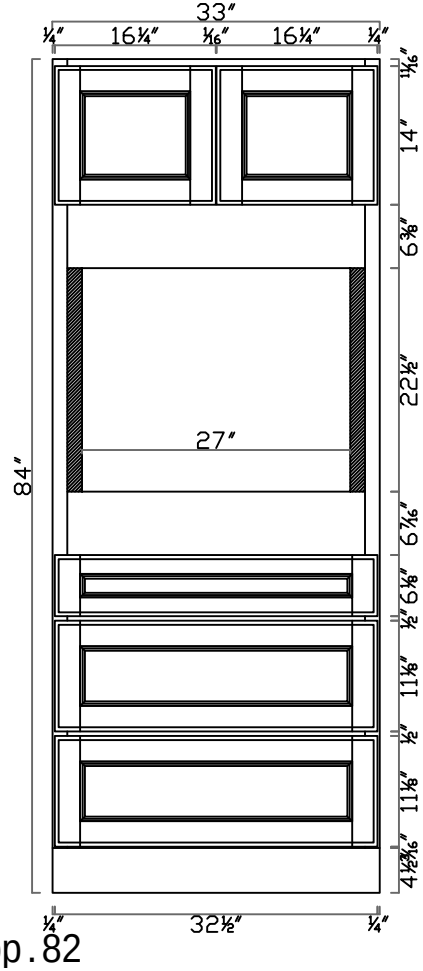

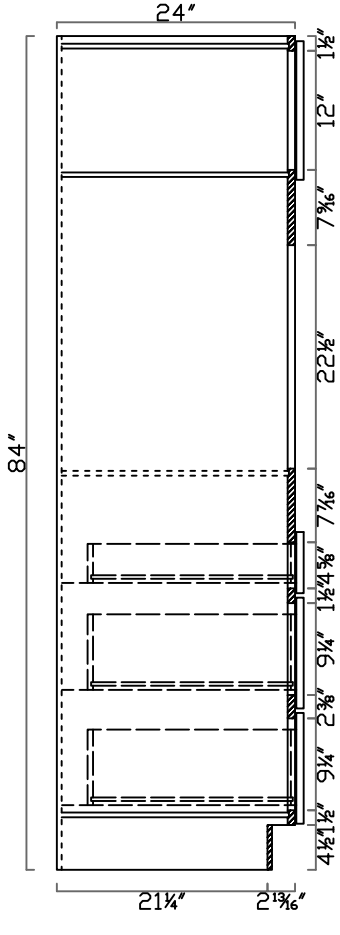

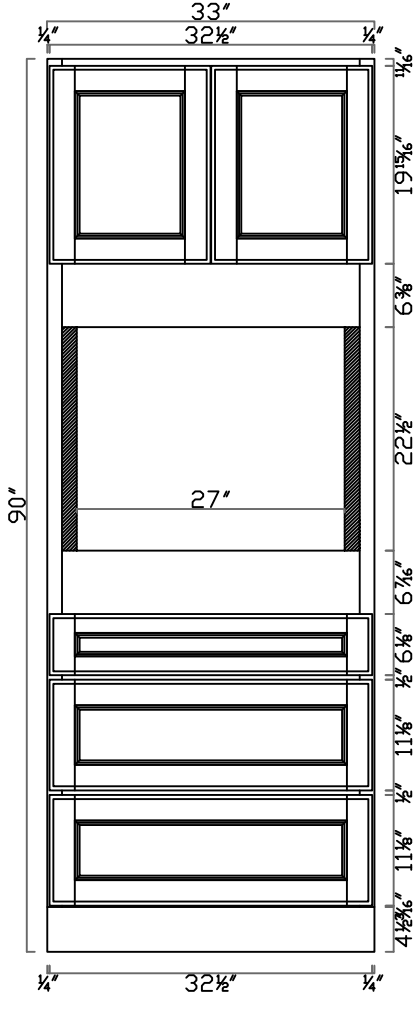

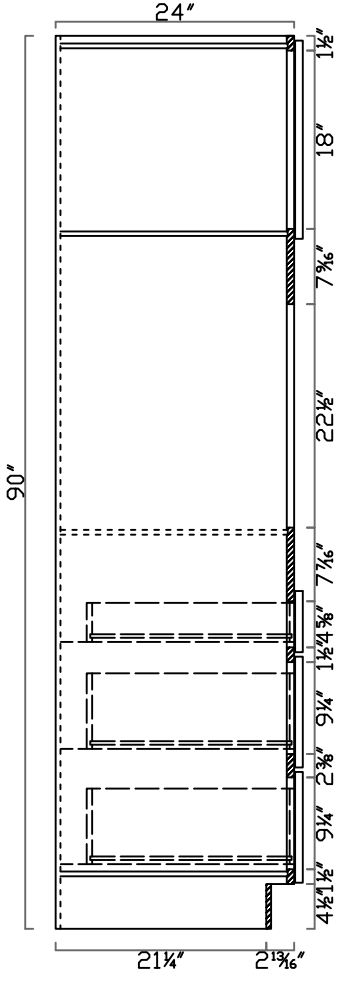

V2421	V3021D	V3621D-L
VDB1221	V3621D-R	V4821D

GHI Cabinetry

SNS SNW

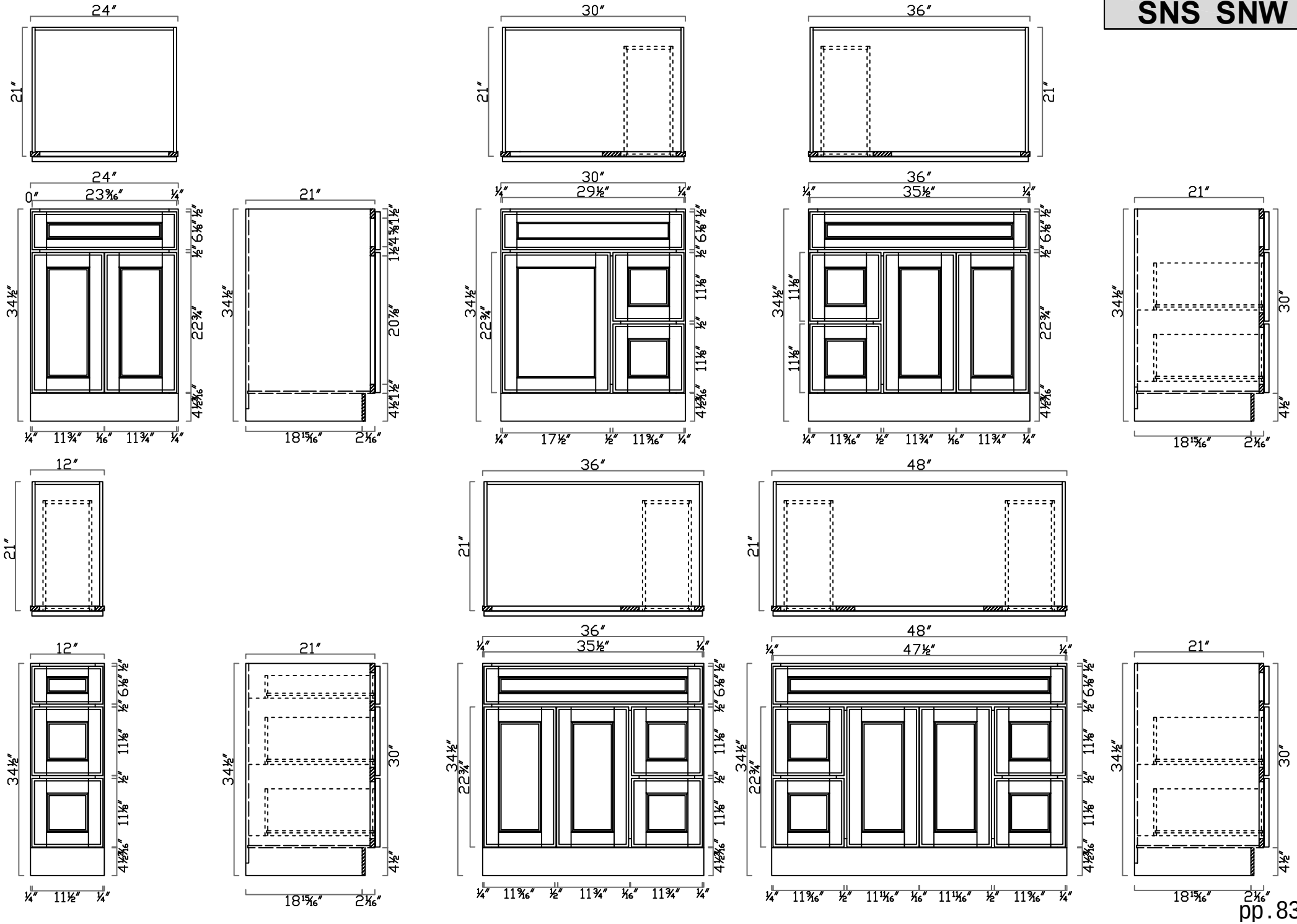

V6021D		M3030	M3630
V1816	V2418	BV2126	L781821

GHI Cabinetry

SNS SNW

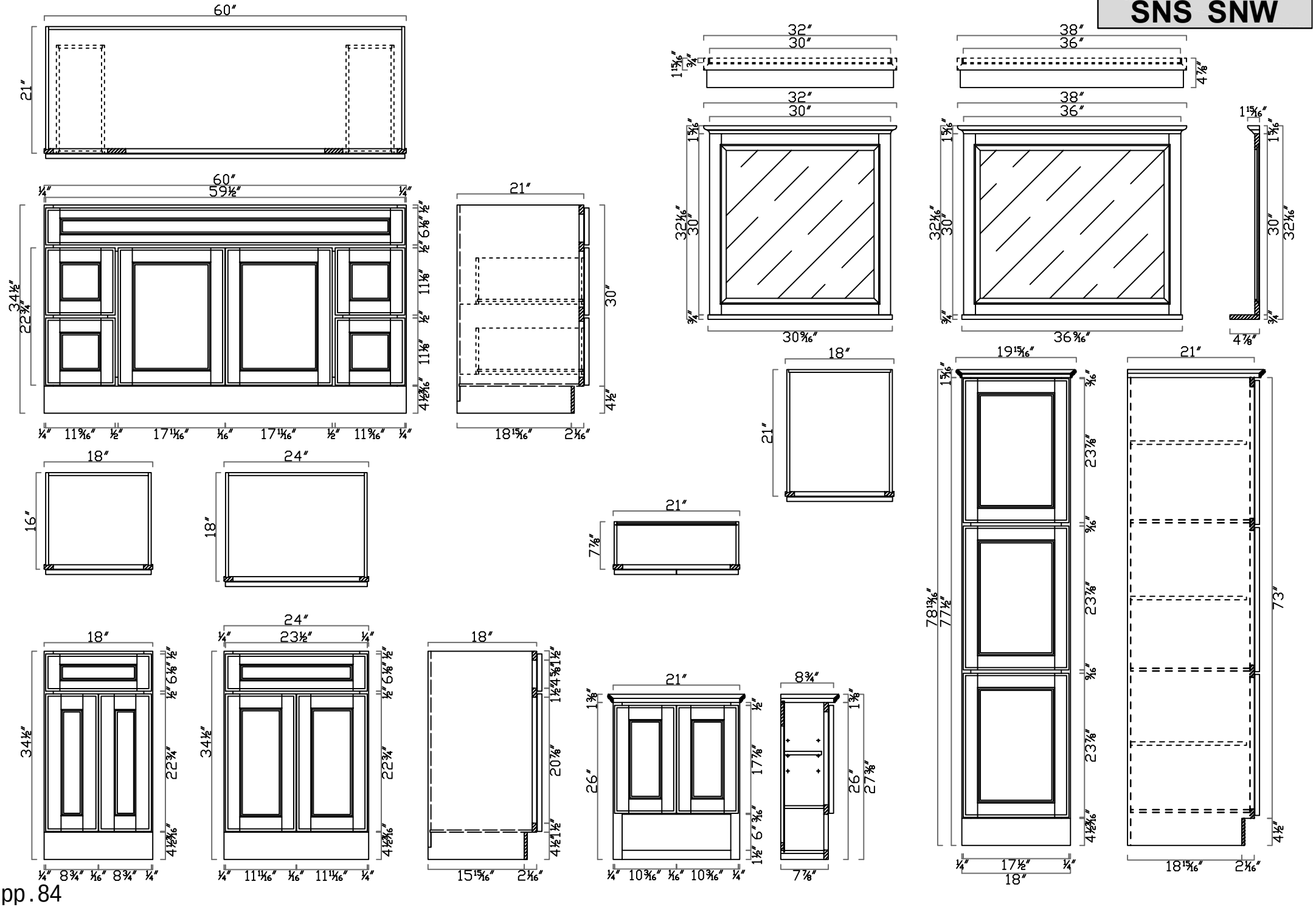

W0930	W1230	W1530	W1830	W2130	W2430
W2730		W3030	W3330	W3630	W4230

GHI Cabinetry

RGO

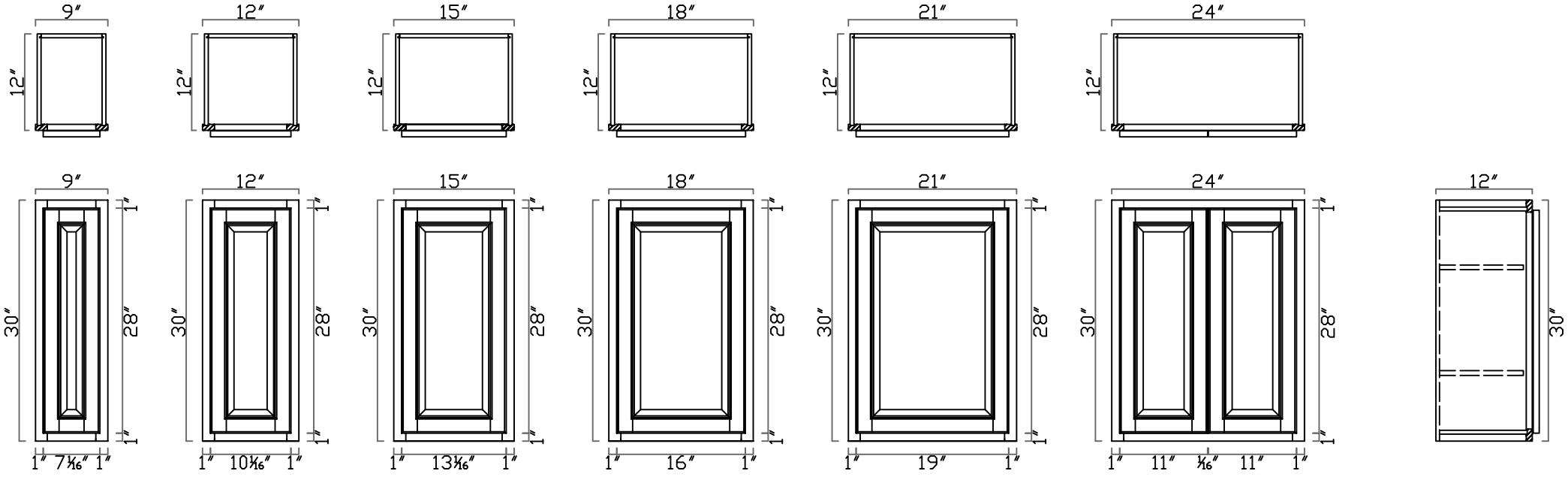

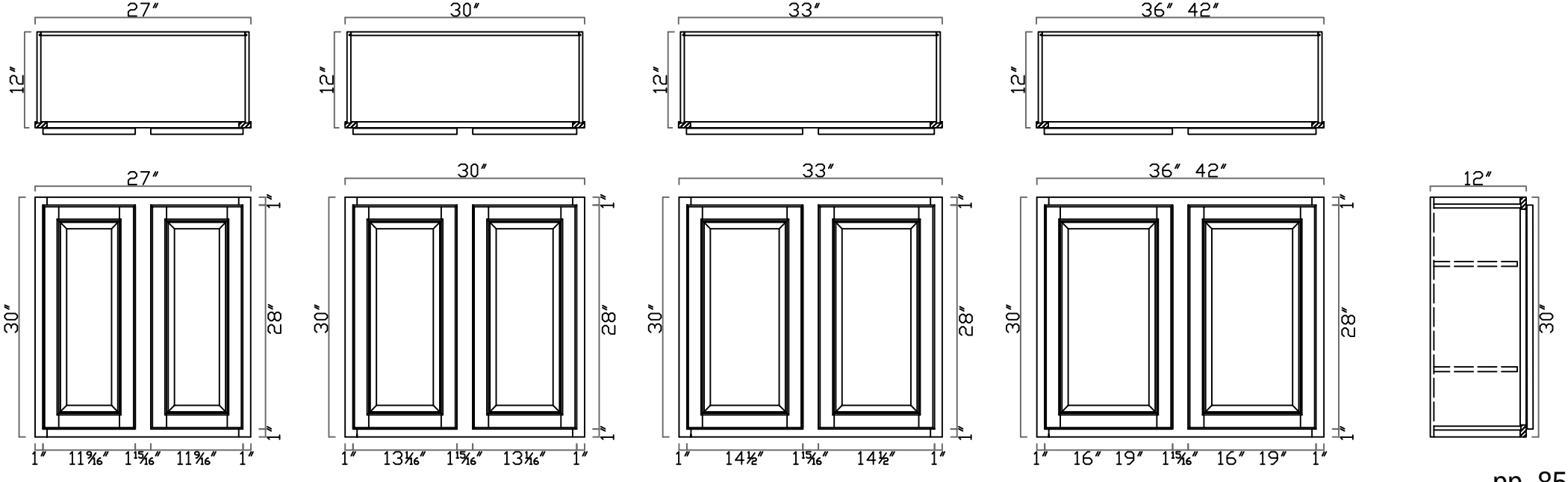

W331524	W361524	W2415	W3315
W6030	WBC2730	WDC2430	

GHI Cabinetry

RGO

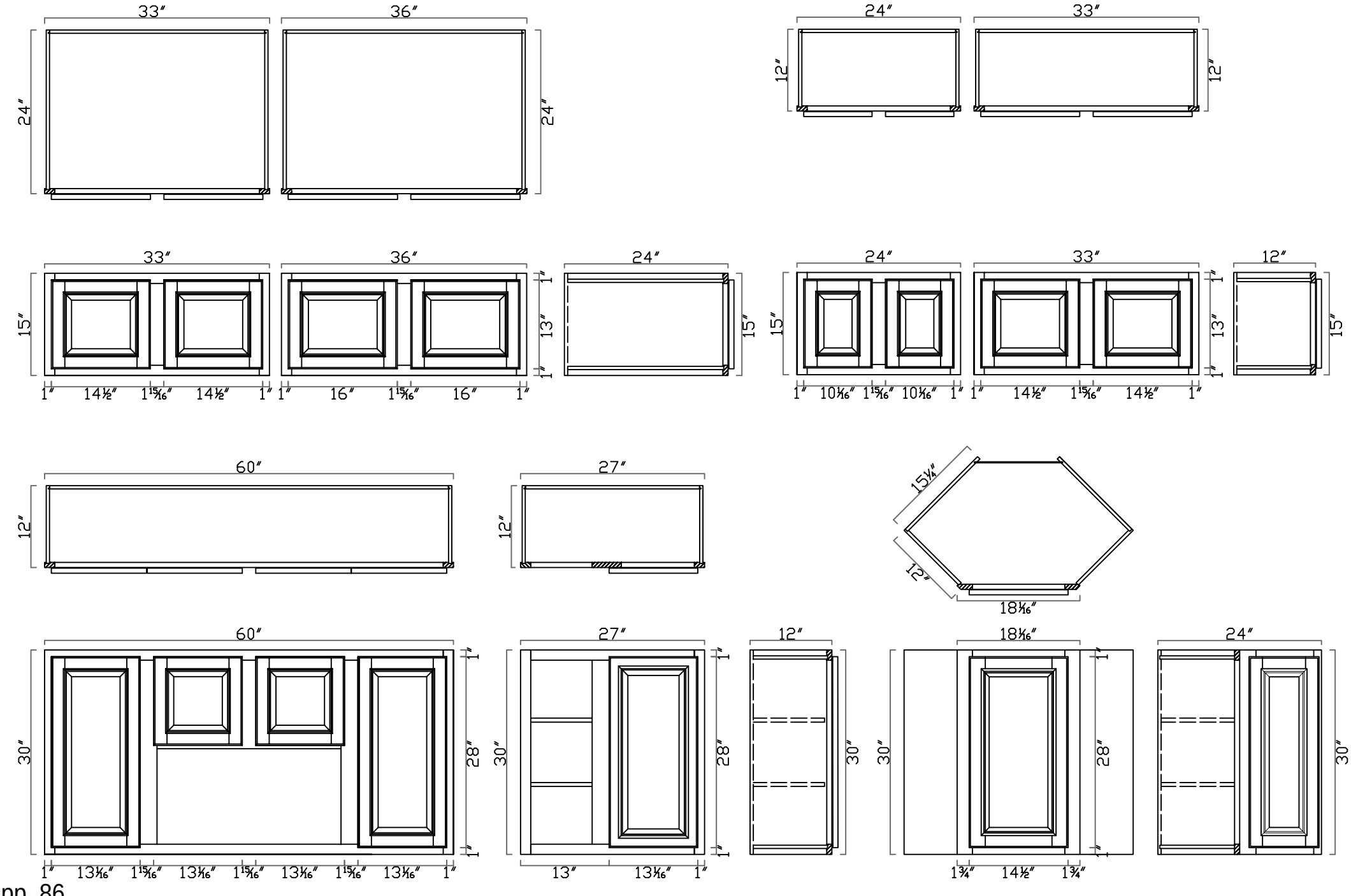

W3012	W3015	W3612	W3615	MC3018
W3018	W3024	W3618	W3624	RP3015
				WR3015

GHI Cabinetry

RGO

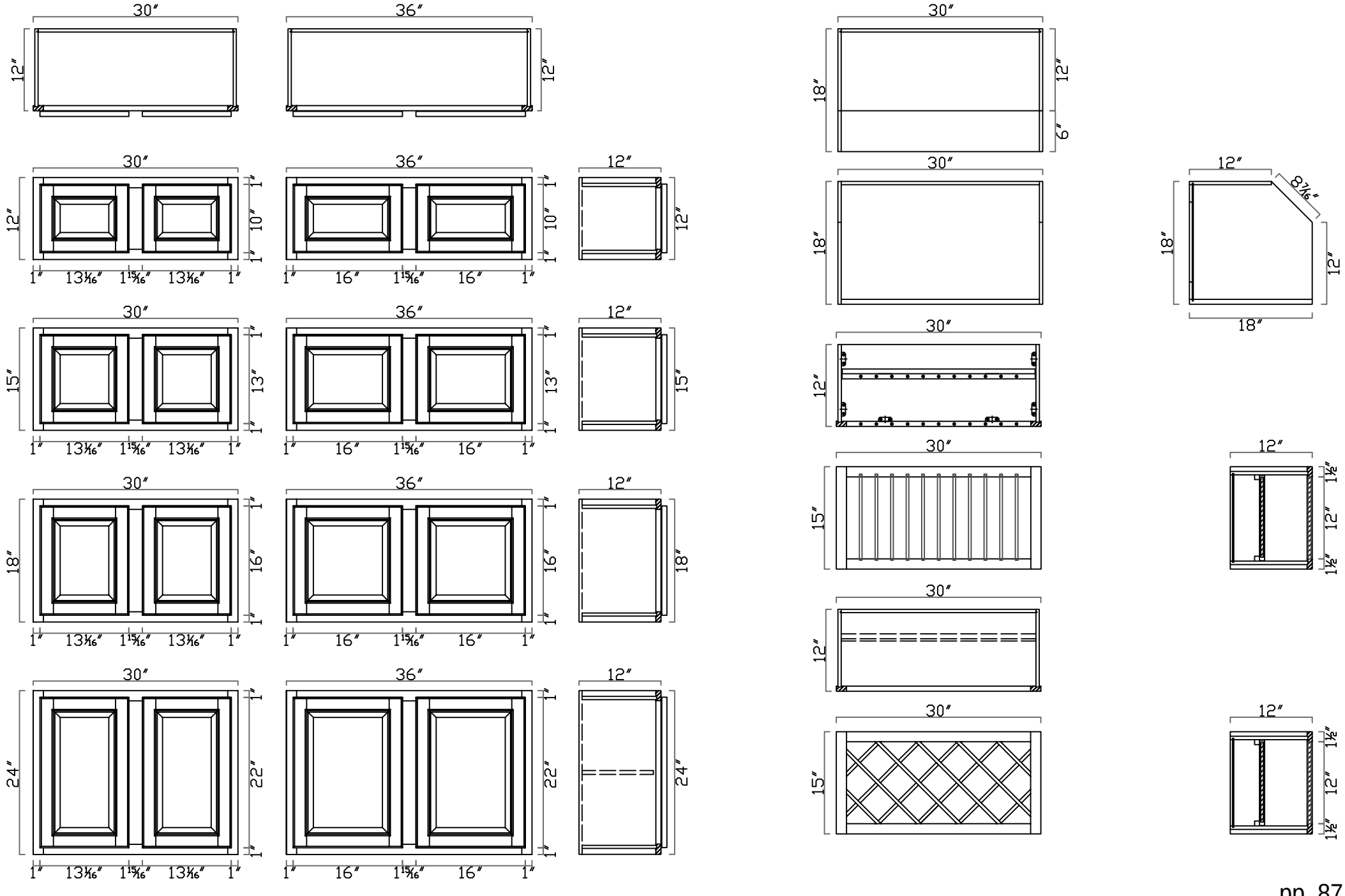

B09 (FH)		B18	B21
B12	B15	B24	B27

GHI Cabinetry

RGO

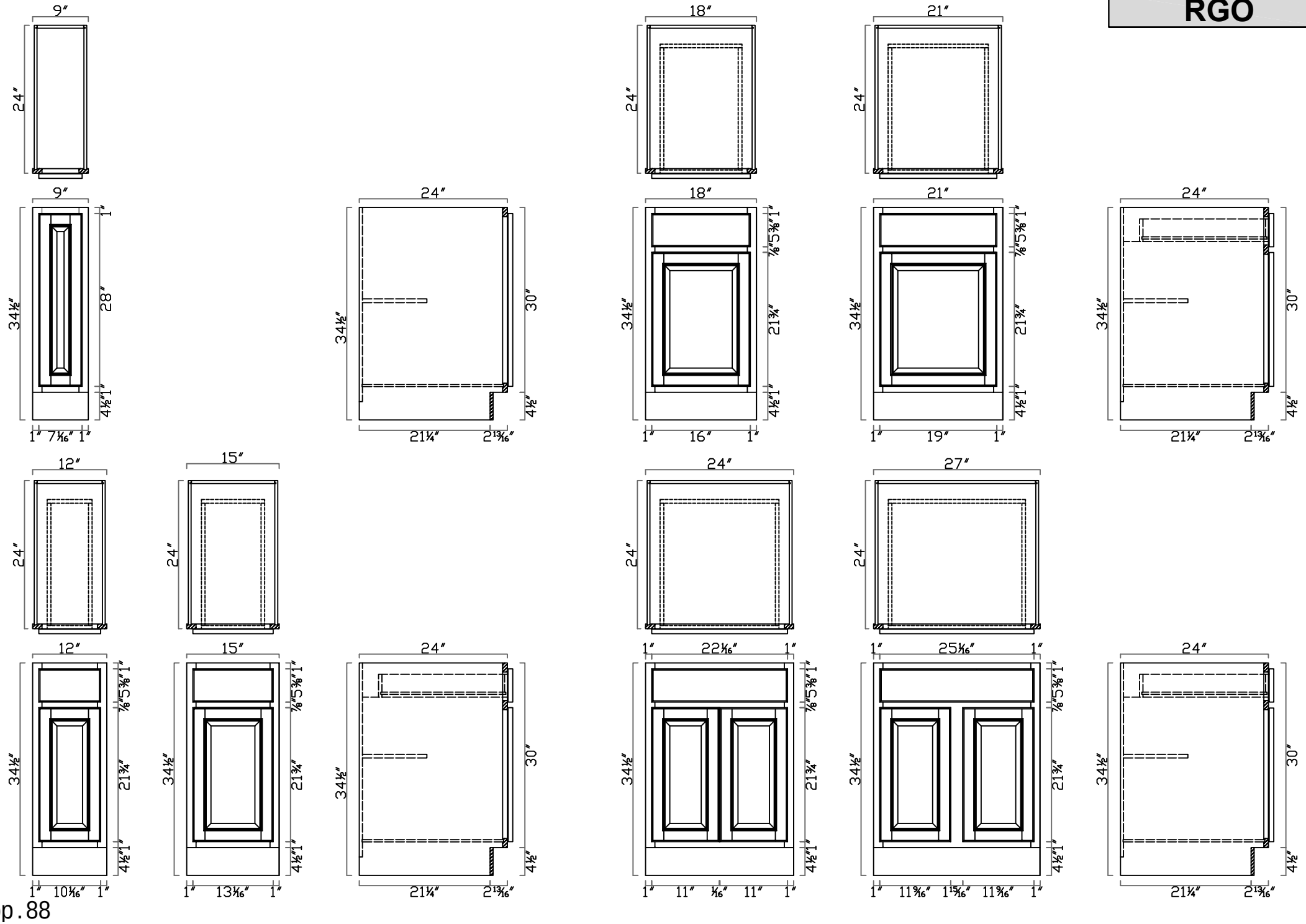

B30	B33	BC24
B36	B42	BBC42-45

GHI Cabinetry

RGO

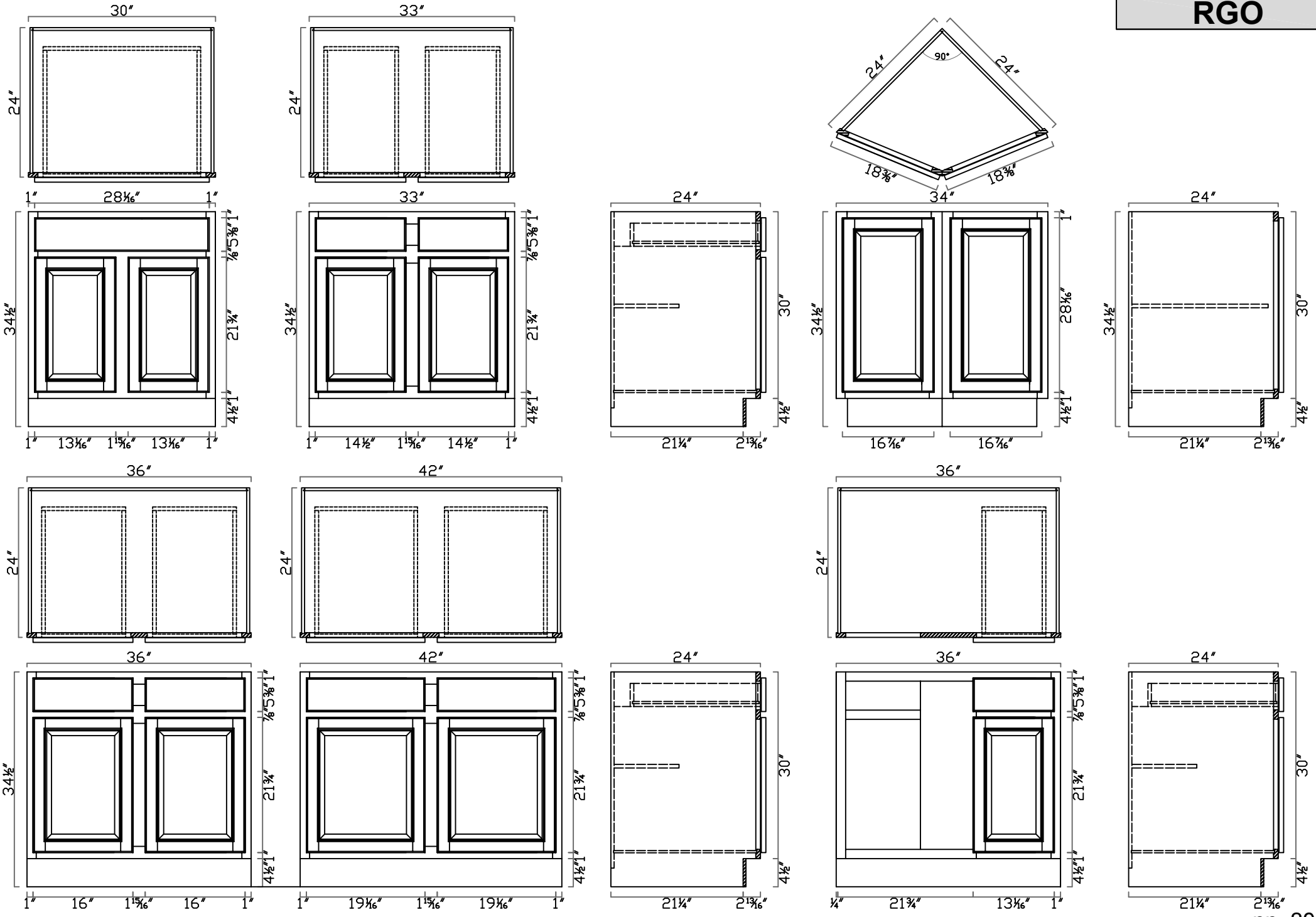

DB15	DB18	DB30
DB21	DB24	DCB3612

GHI Cabinetry

RGO

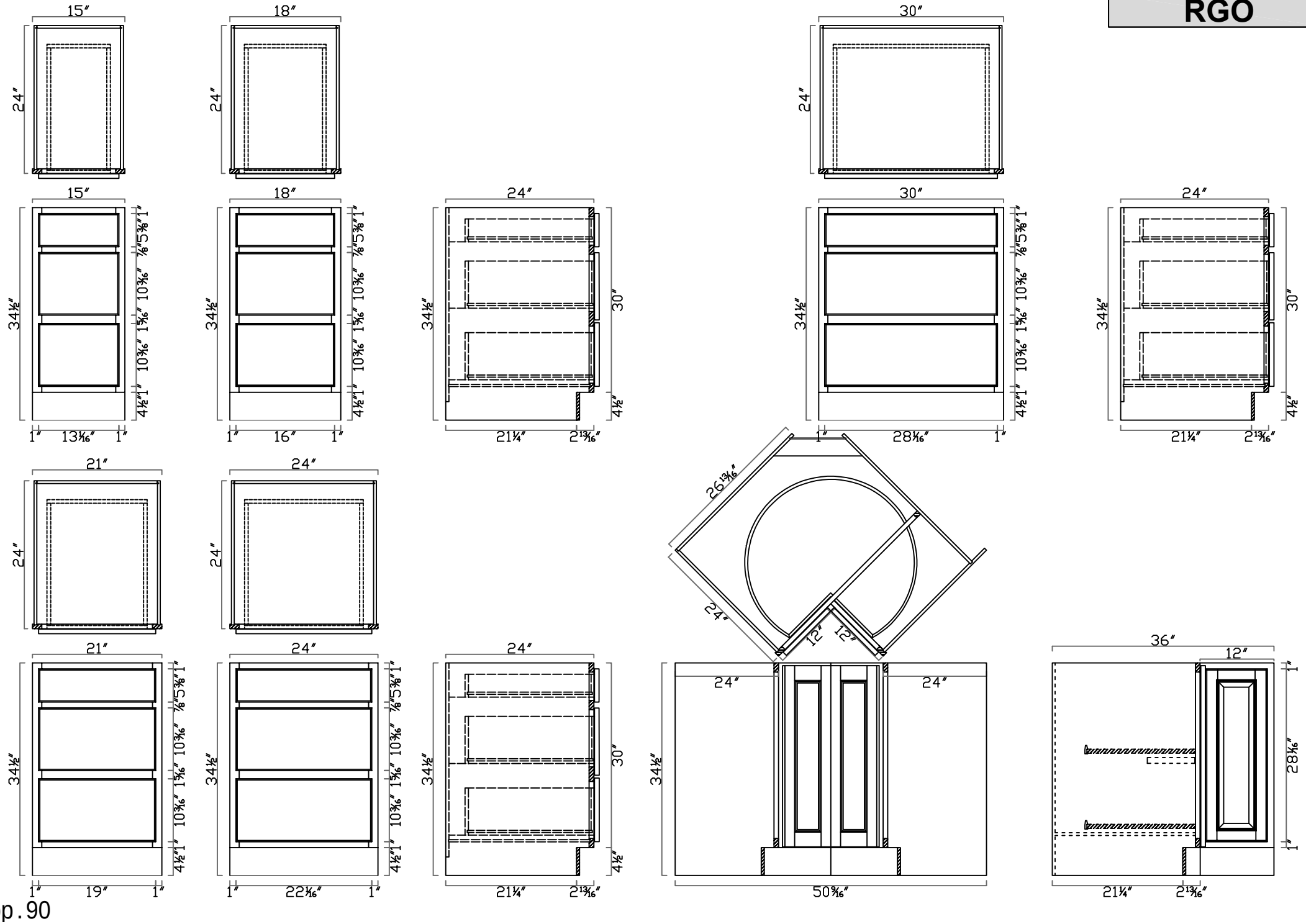

SB30	SB33	SB36
SB42		SB60

GHI Cabinetry

RGO

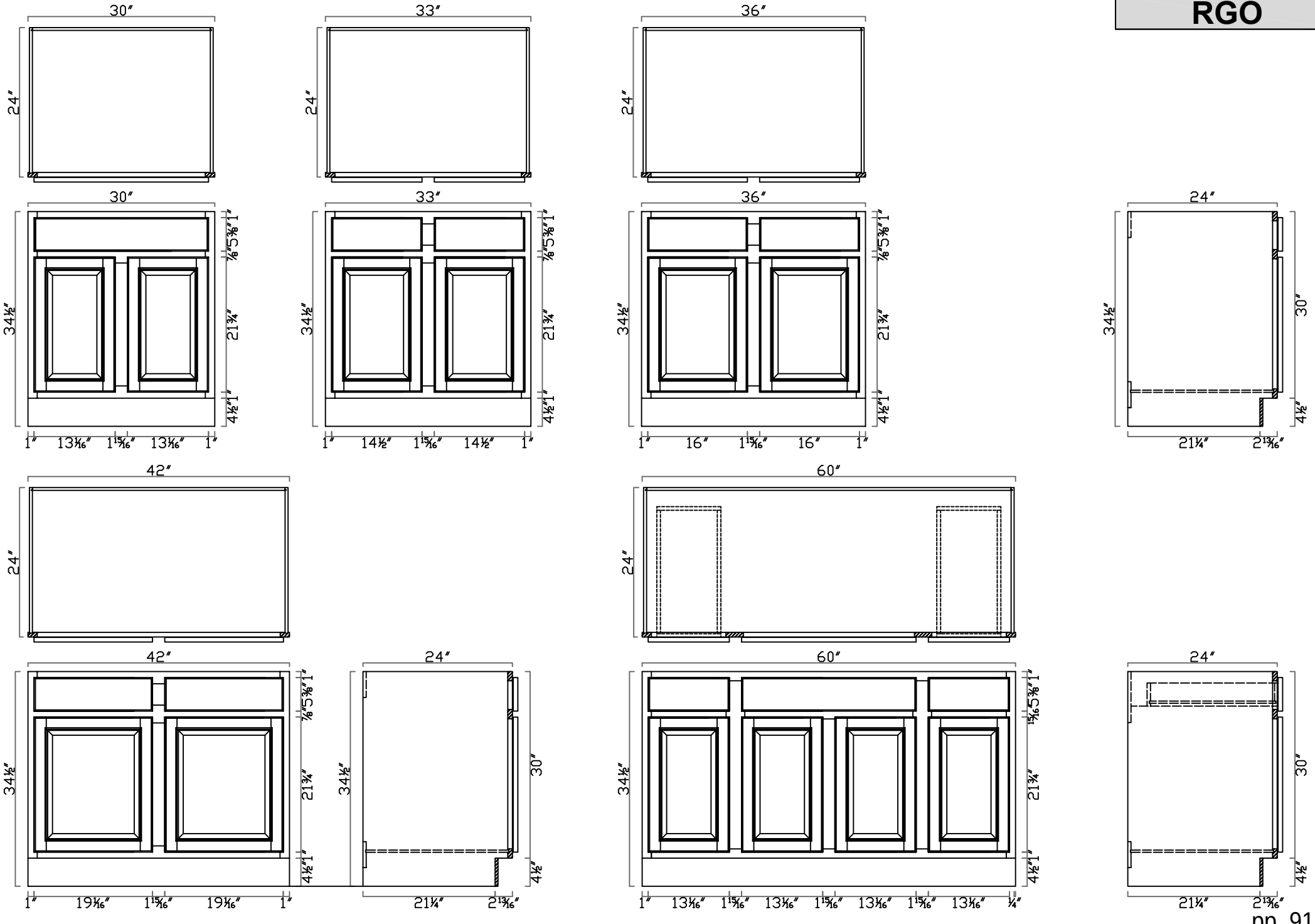

WP1884 WP2484 OU332484

GHI Cabinetry

RGO

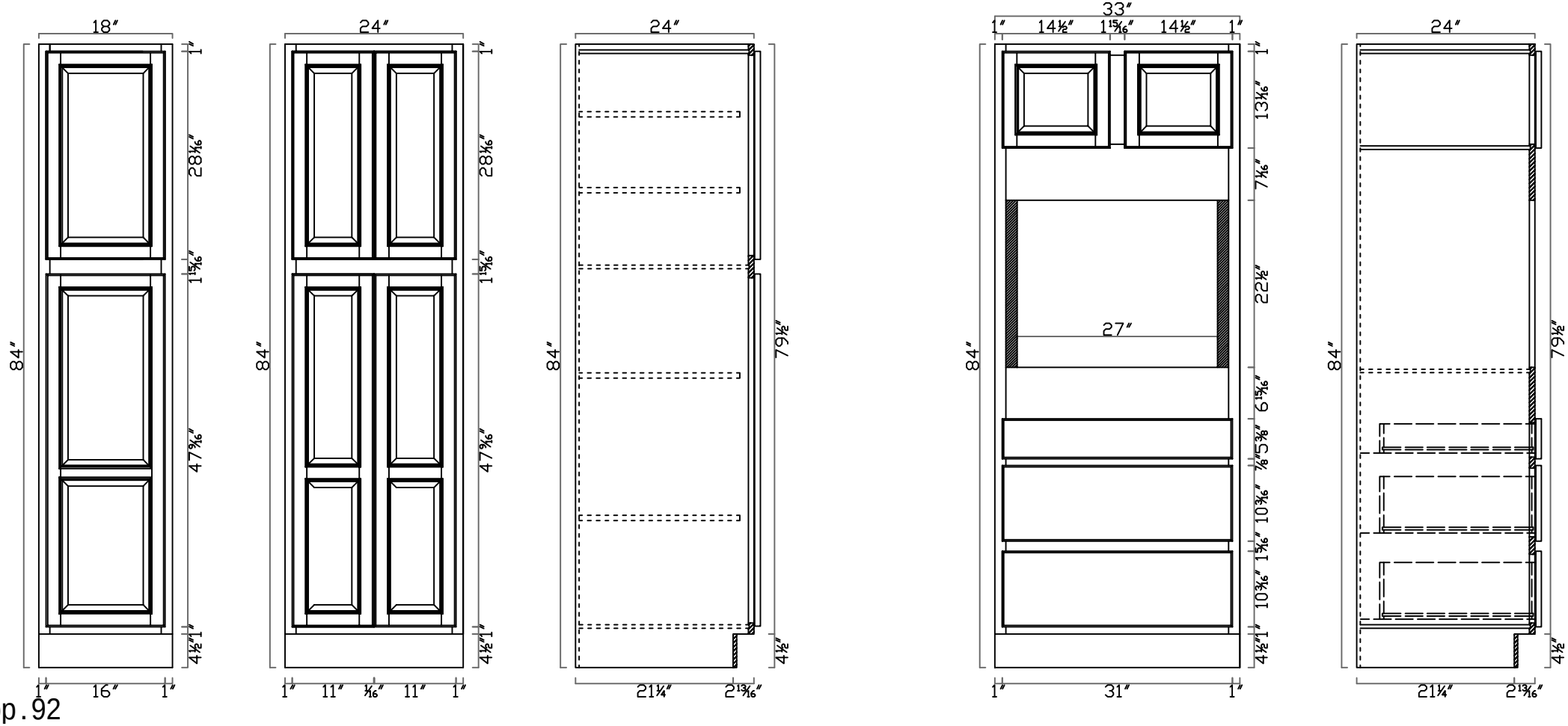

VA1816	VA2418	V2421	VA3021
VA2418D	VA3018D	VA3618D	VA4818D

GHI Cabinetry

RGO

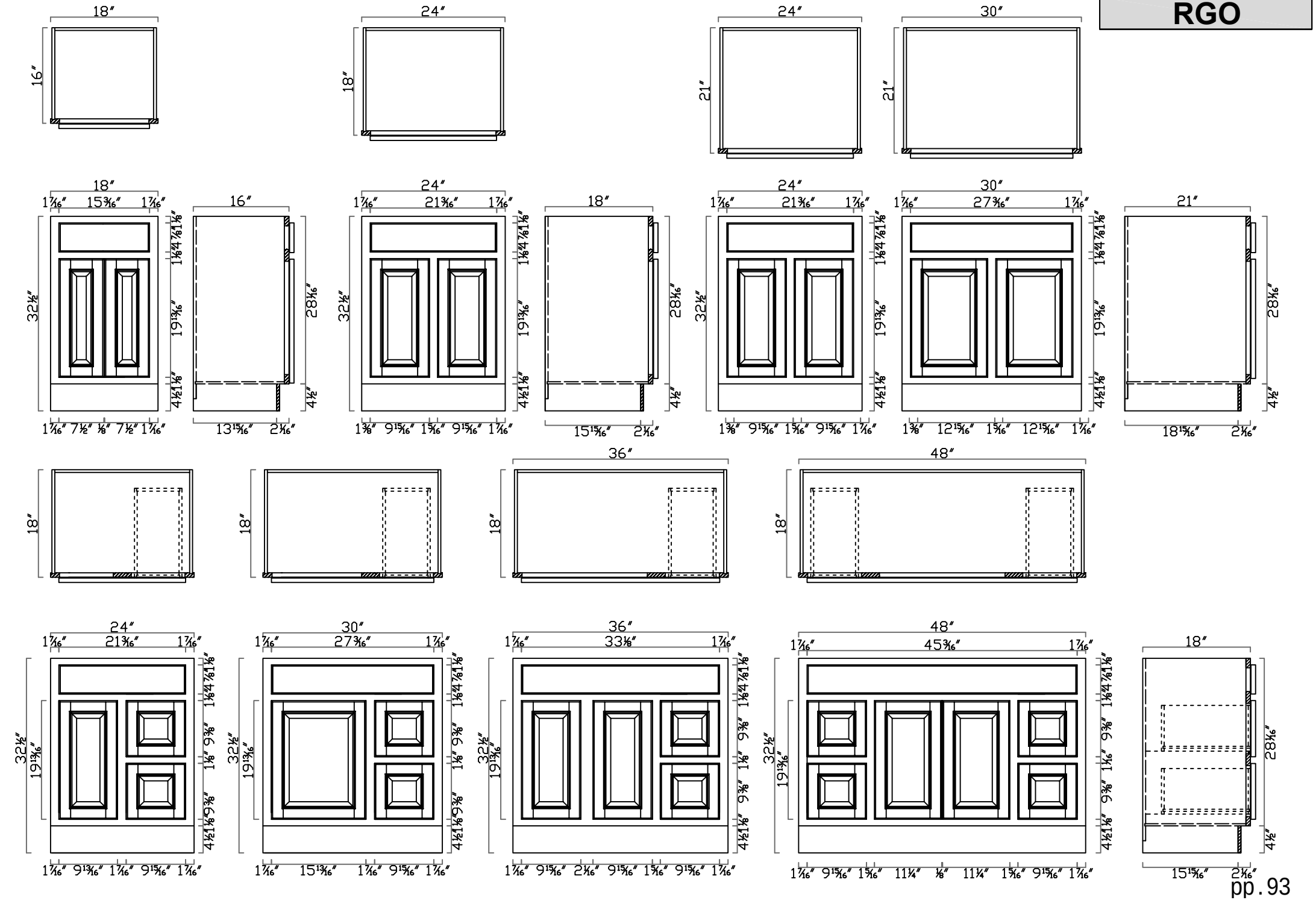

VA2421D	VA3021D	VA3621D	VA4221D
VA4821D		VA6021D	

GHI Cabinetry

RGO

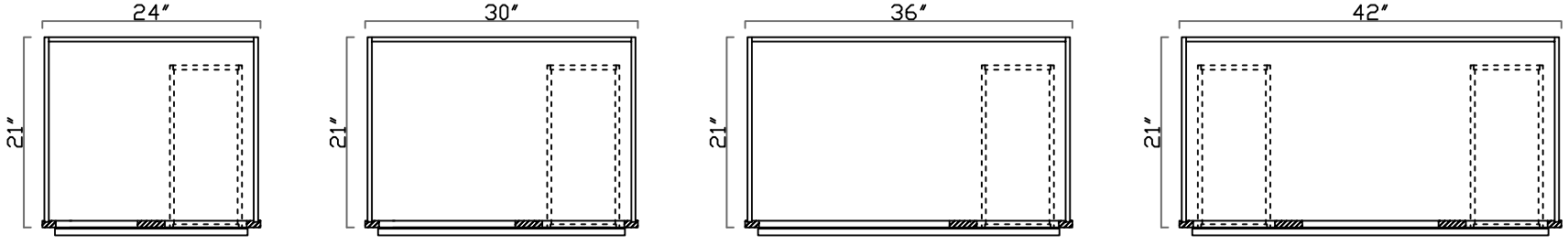

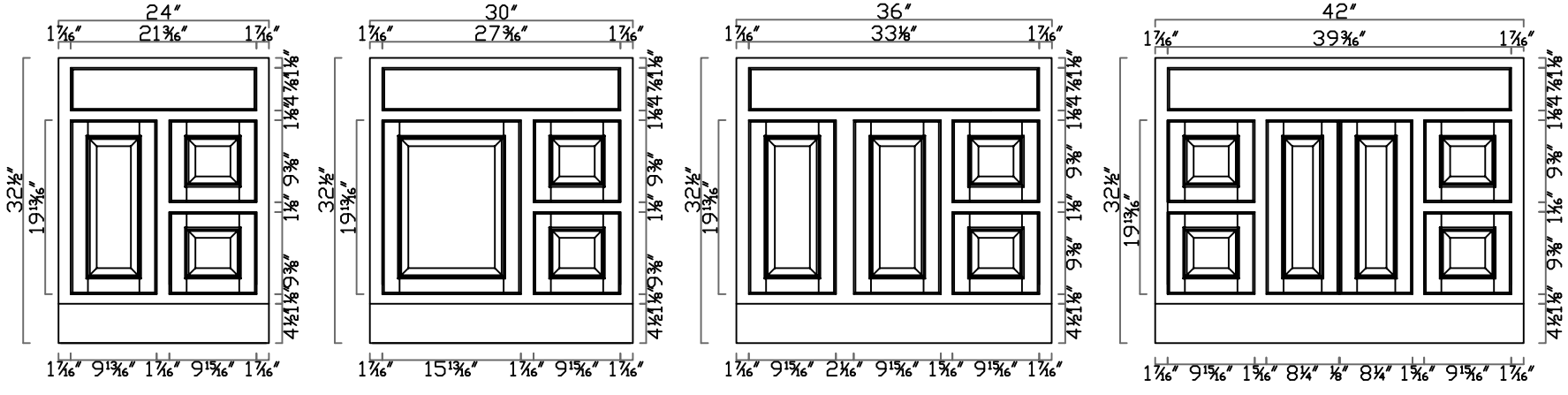

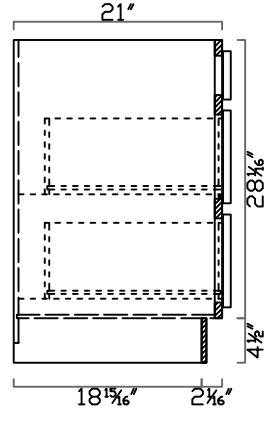

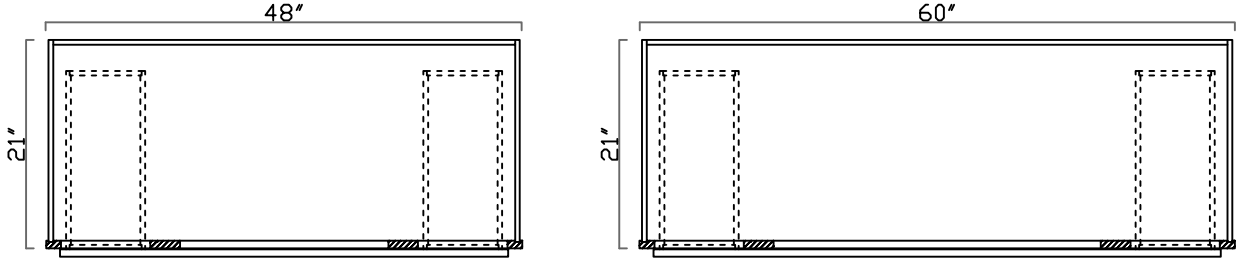

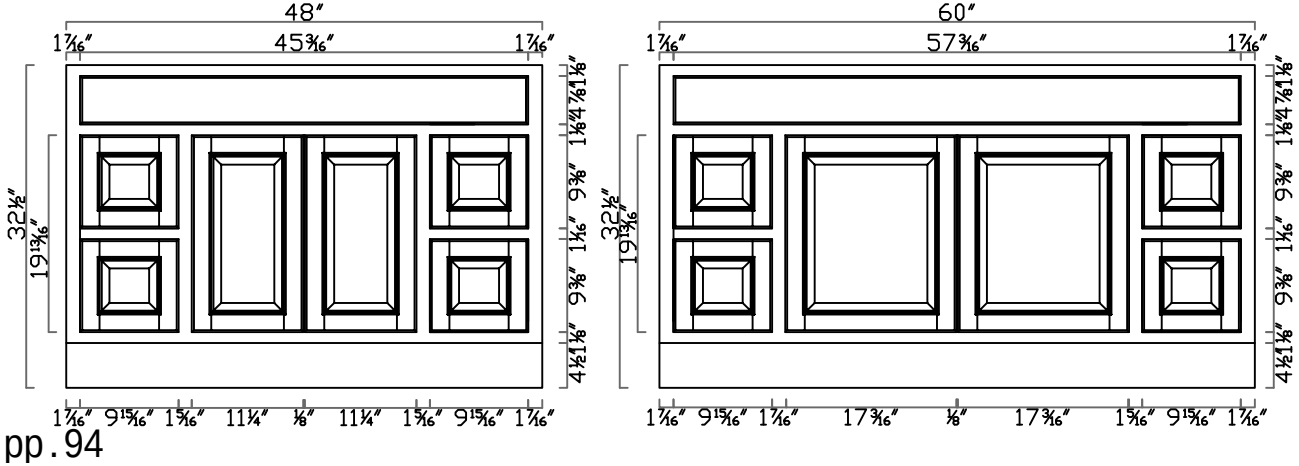

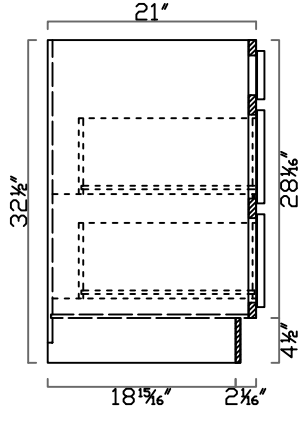

SM1926	SM2426	SC3027 SC3627	BV2126	VLC781518
TRV3030	TRV3630	LB183L LB244L LB305L LB366L	VDB1221	

GHI Cabinetry

RGO

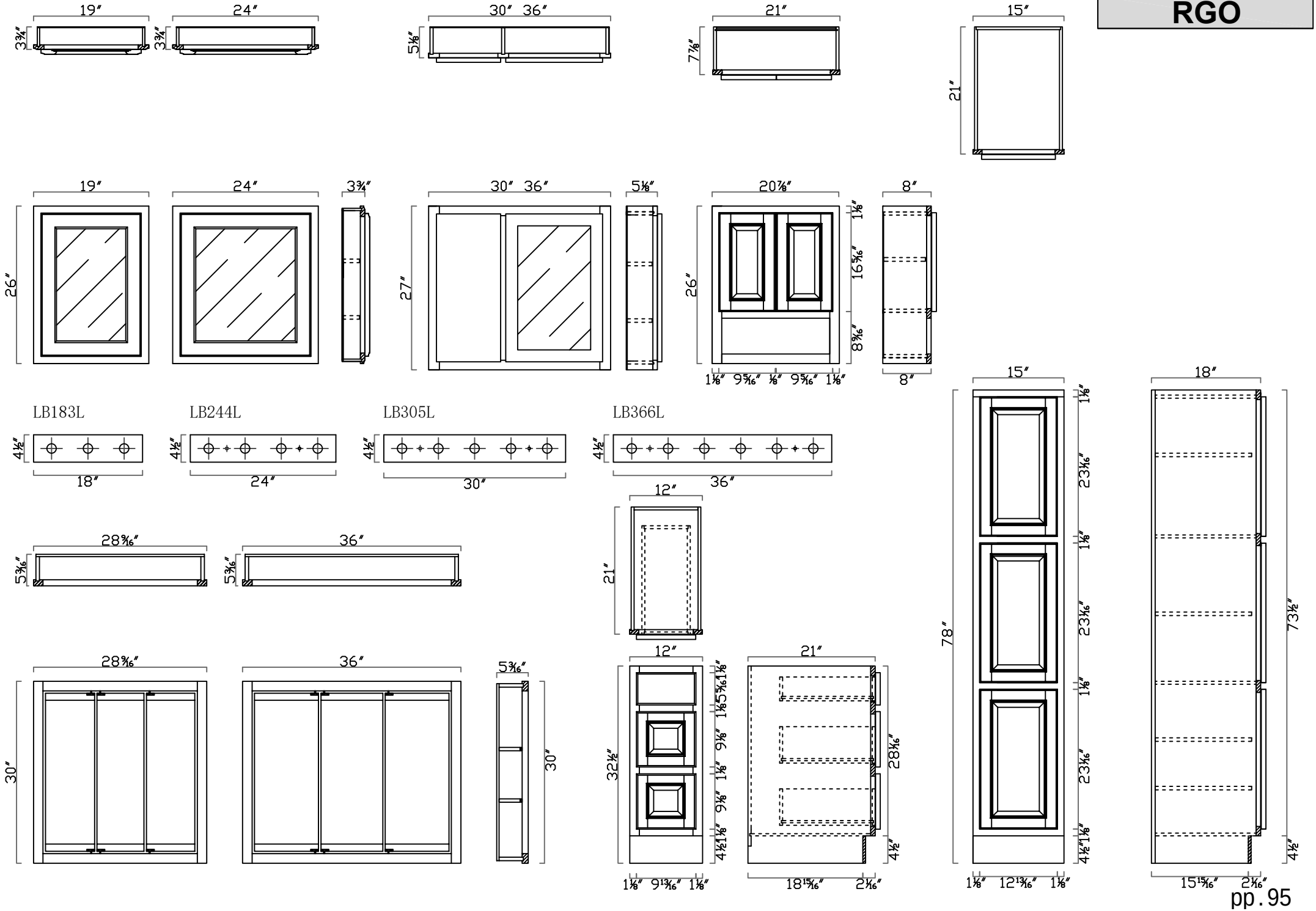

Accessories

ACW SHG FTS RWS PCG MJS

W1530 Mullion Door
WDC2430 Mullion Door

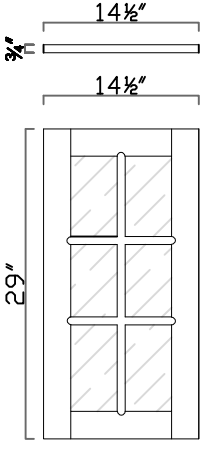

W3030 Mullion Door

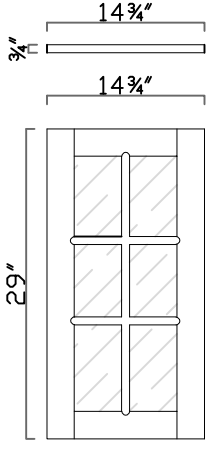

W1830 Mullion Door

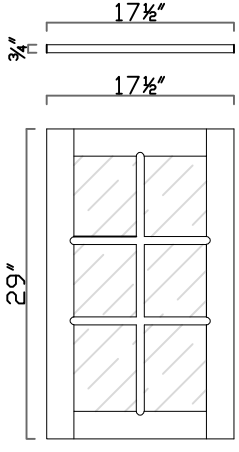

W3630 Mullion Door

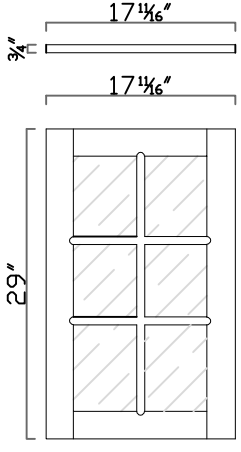

W1536 Mullion Door
WDC2436 Mullion Door
WDC2736 Mullion Door

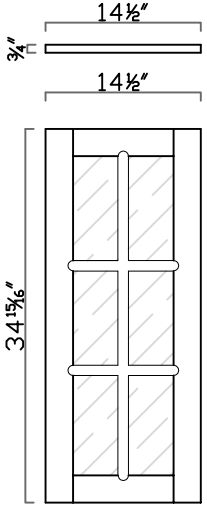

W3036 Mullion Door

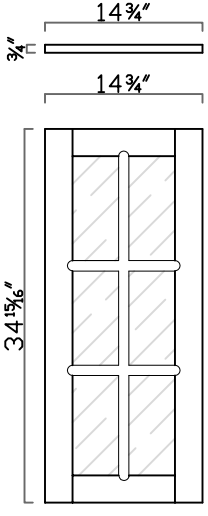

W1836 Mullion Door

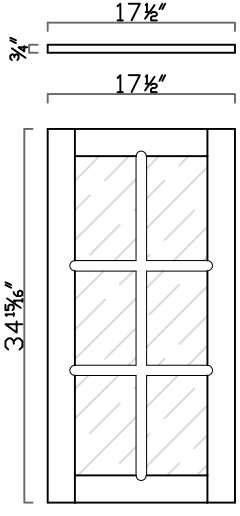

W3636 Mullion Door

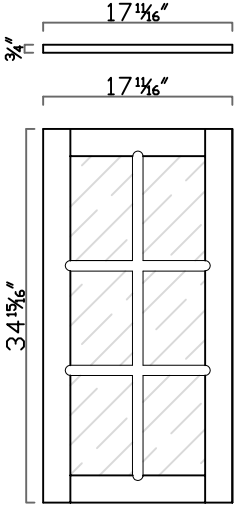

W1542 Mullion Door
WDC2442 Mullion Door
WDC2742 Mullion Door

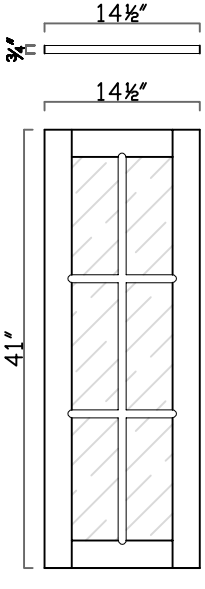

W3042 Mullion Door

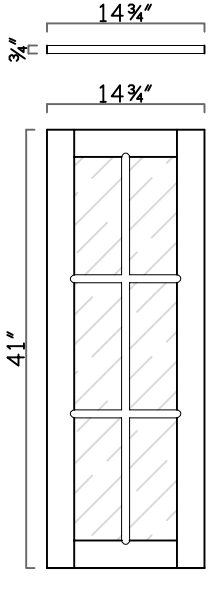

W1842 Mullion Door

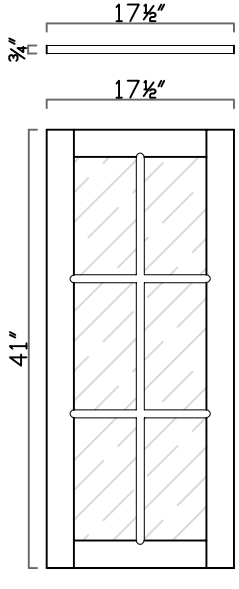

W3642 Mullion Door

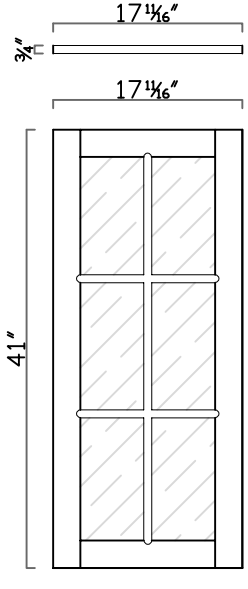

30DD

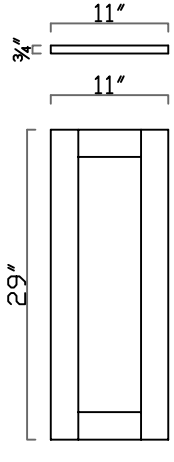

36DD

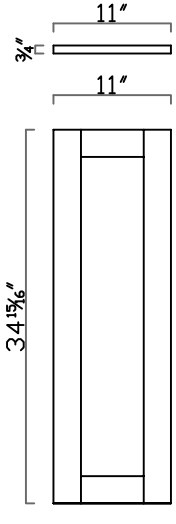

42DD

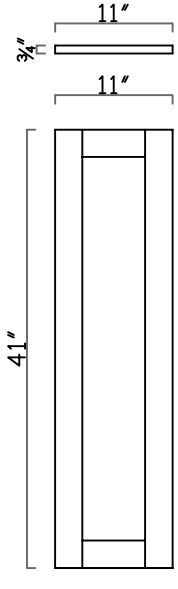

BDD

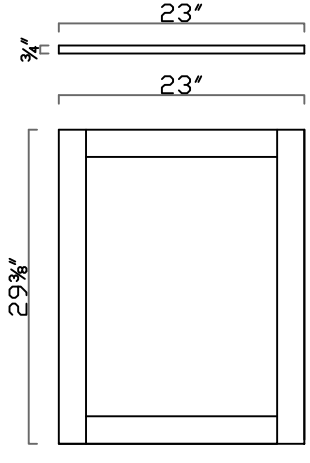

Accessories

GHI Cabinetry

NTL

W1530 Mullion Door
WDC2430 Mullion Door

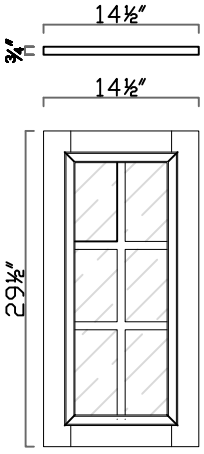

W3030 Mullion Door

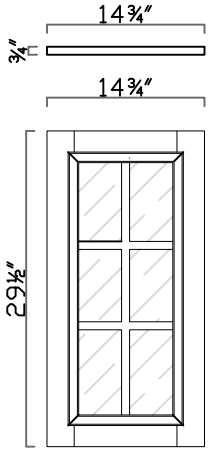

W1830 Mullion Door

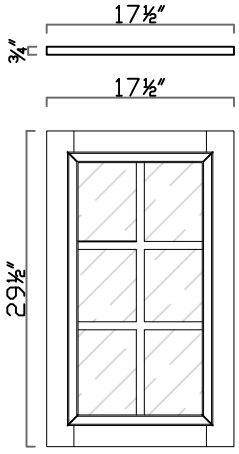

W3630 Mullion Door

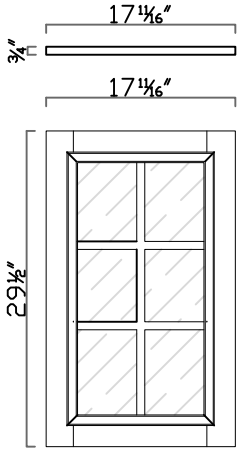

W1536 Mullion Door
WDC2436 Mullion Door
WDC2736 Mullion Door

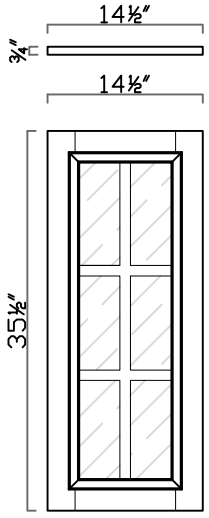

W3036 Mullion Door

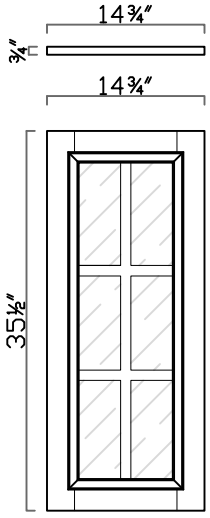

W1836 Mullion Door

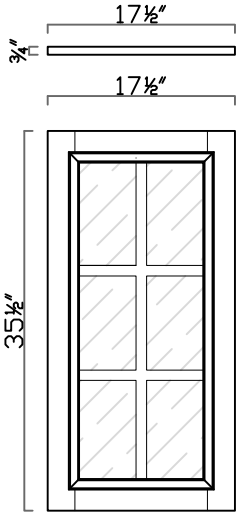

W3636 Mullion Door

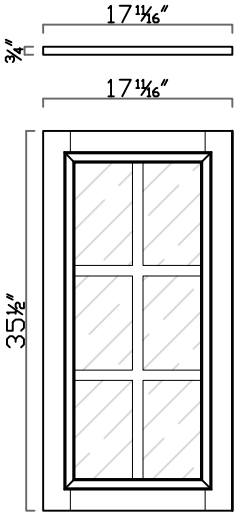

W1542 Mullion Door
WDC2442 Mullion Door
WDC2742 Mullion Door

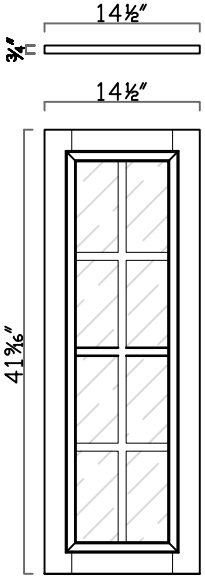

W3042 Mullion Door

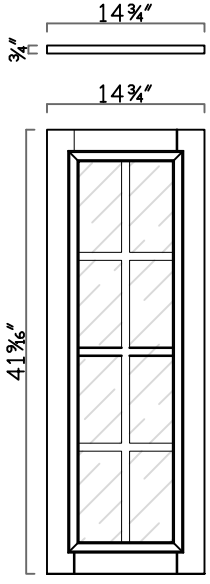

W1842 Mullion Door

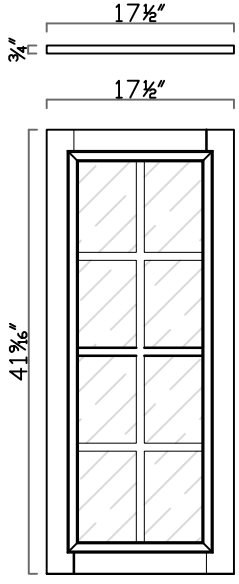

W3642 Mullion Door

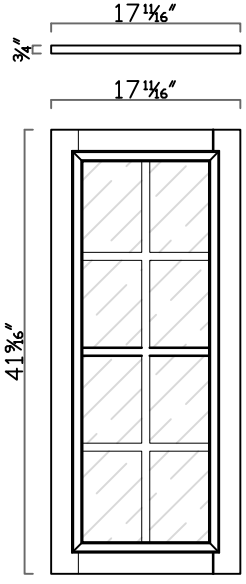

30DD

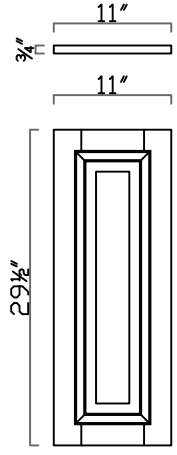

36DD

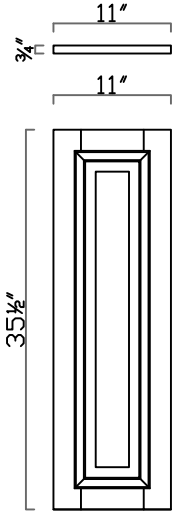

42DD

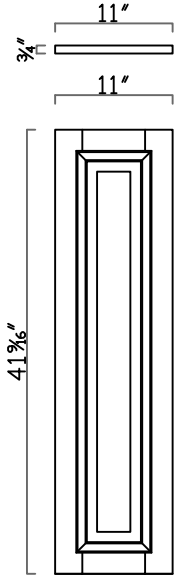

BDD

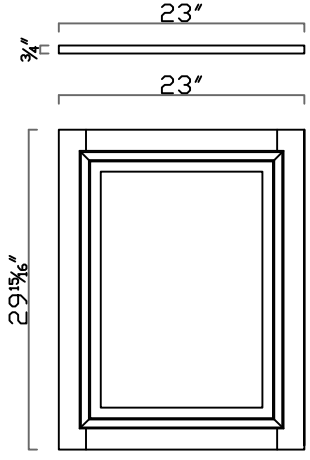

Accessories

GHI Cabinetry

SNS SNW

W1530 Mullion Door
WDC2430 Mullion Door

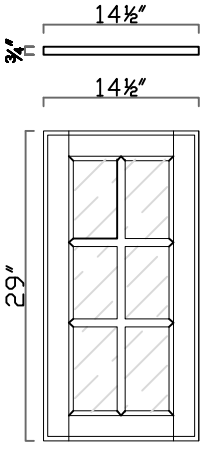

W3030 Mullion Door

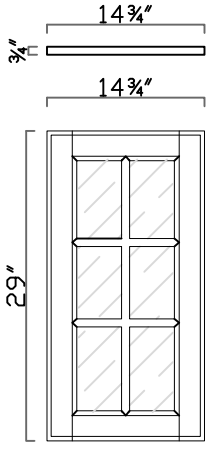

W1830 Mullion Door

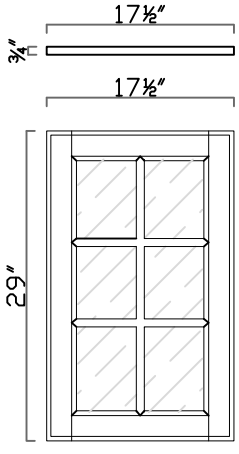

W3630 Mullion Door

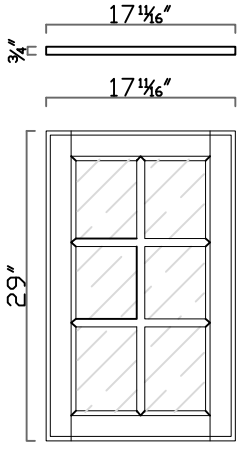

W1536 Mullion Door
WDC2436 Mullion Door
WDC2736 Mullion Door

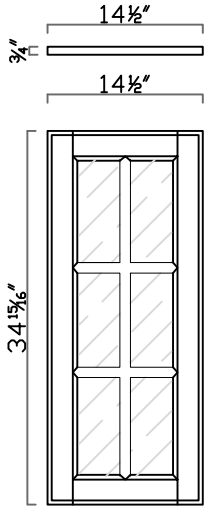

W3036 Mullion Door

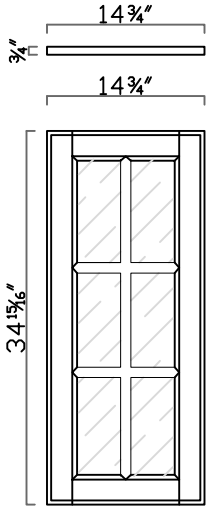

W1836 Mullion Door

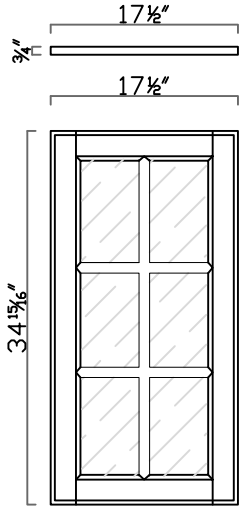

W3636 Mullion Door

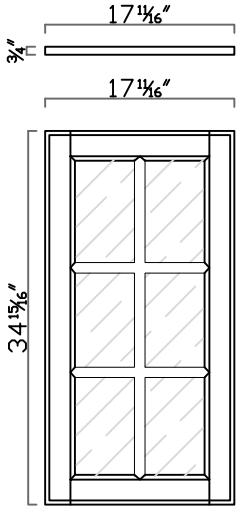

W1542 Mullion Door
WDC2442 Mullion Door
WDC2742 Mullion Door

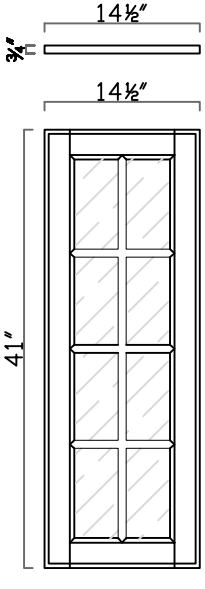

W3042 Mullion Door

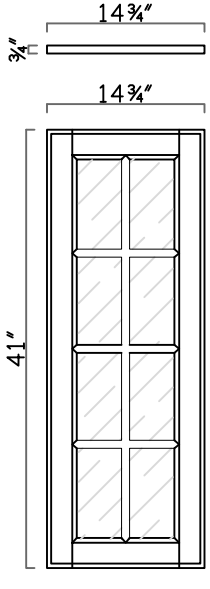

W1842 Mullion Door

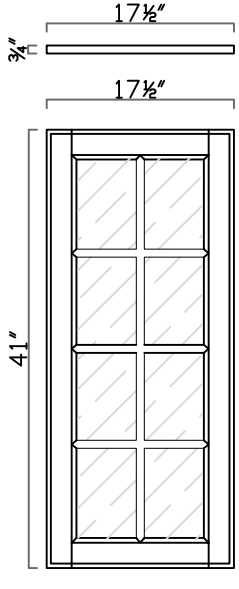

W3642 Mullion Door

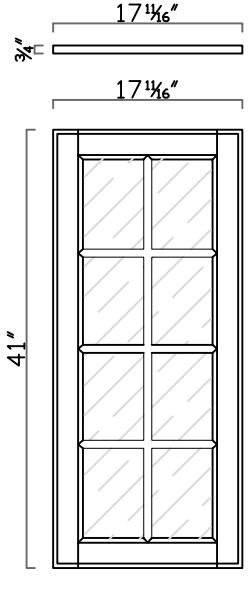

30DD

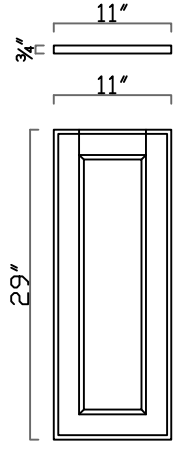

36DD

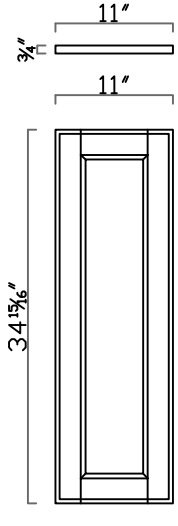

42DD

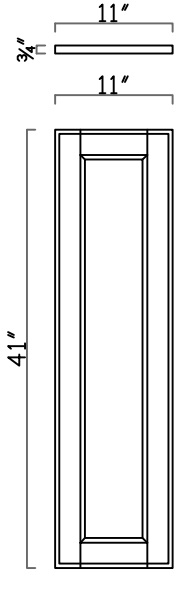

BDD

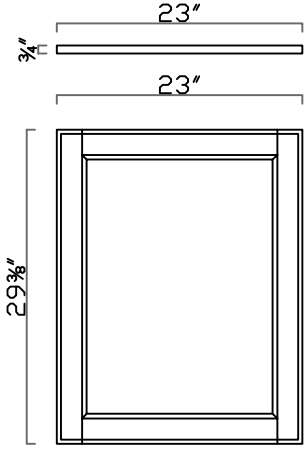

SNS SNW

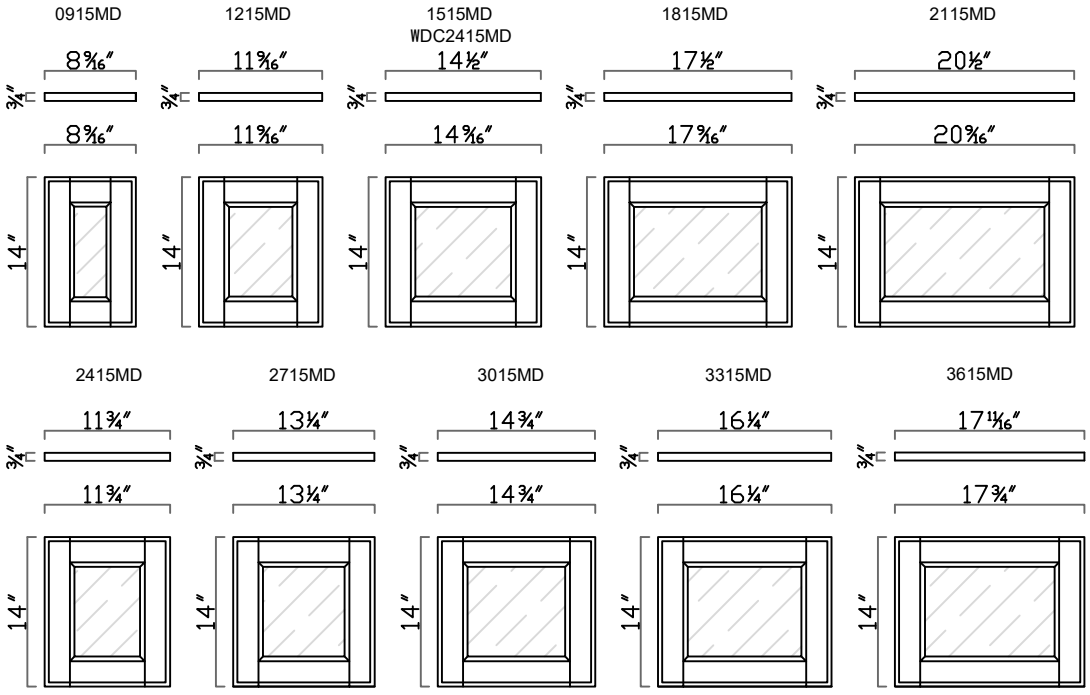
0915MD
8 9/16″
8 9/16″
14″
1215MD
11 9/16″
11 9/16″
14″
1515MD
WDC2415MD
14 1/2″
14 9/16″
14″
1815MD
17 1/2″
17 9/16″
14″
2115MD
20 1/2″
20 9/16″
14″
2415MD
11 3/4″
11 3/4″
14″
2715MD
13 1/4″
13 1/4″
14″
3015MD
14 3/4″
14 3/4″
14″
3315MD
16 1/4″
16 1/4″
14″
3615MD
17 11/16″
17 3/4″
14″
3/4″

RGO

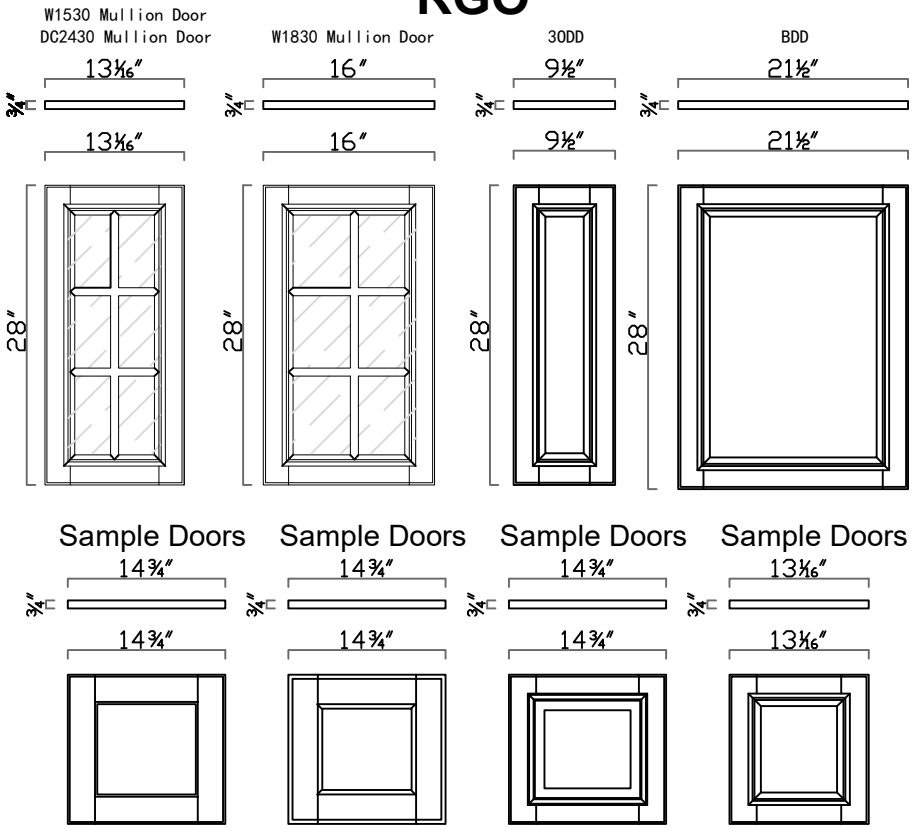
W1530 Mullion Door
DC2430 Mullion Door
13 1/16″
13 1/16″
28″
W1830 Mullion Door
16″
16″
28″
30DD
9 1/2″
9 1/2″
28″
BDD
21 1/2″
21 1/2″
28″
Sample Doors
14 3/4″
14 3/4″
Sample Doors
14 3/4″
14 3/4″
Sample Doors
14 3/4″
14 3/4″
Sample Doors
13 1/16″
13 1/16″
3/4″

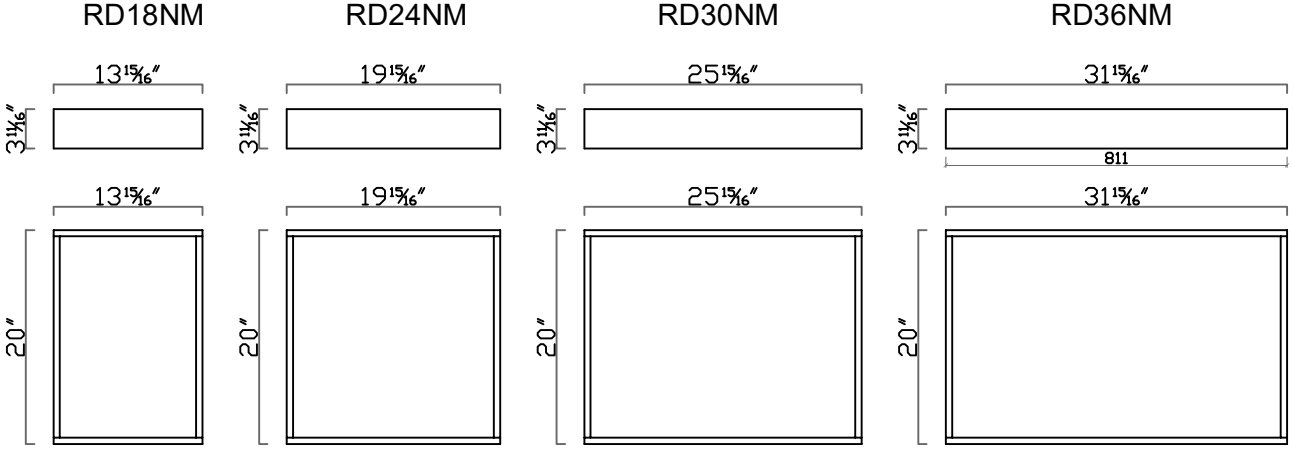
RD18NM
13 15/16″
13 15/16″
20″
RD24NM
19 15/16″
19 15/16″
20″
RD30NM
25 15/16″
25 15/16″
20″
RD36NM
31 15/16″
31 15/16″
20″
3 1/16″
811

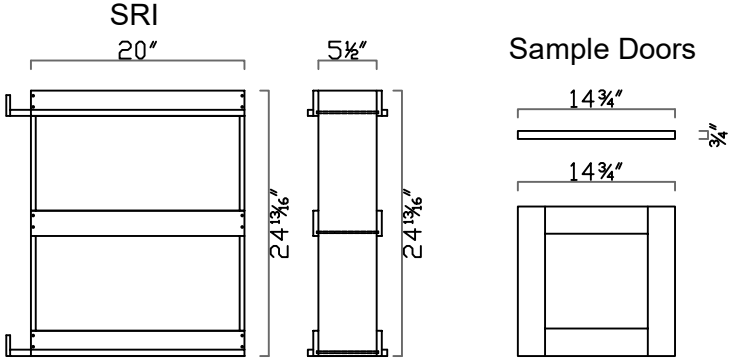
SRI
20″
5 1/2″
24 13/16″
24 13/16″
Sample Doors
14 3/4″
14 3/4″
3/4″

Accessories

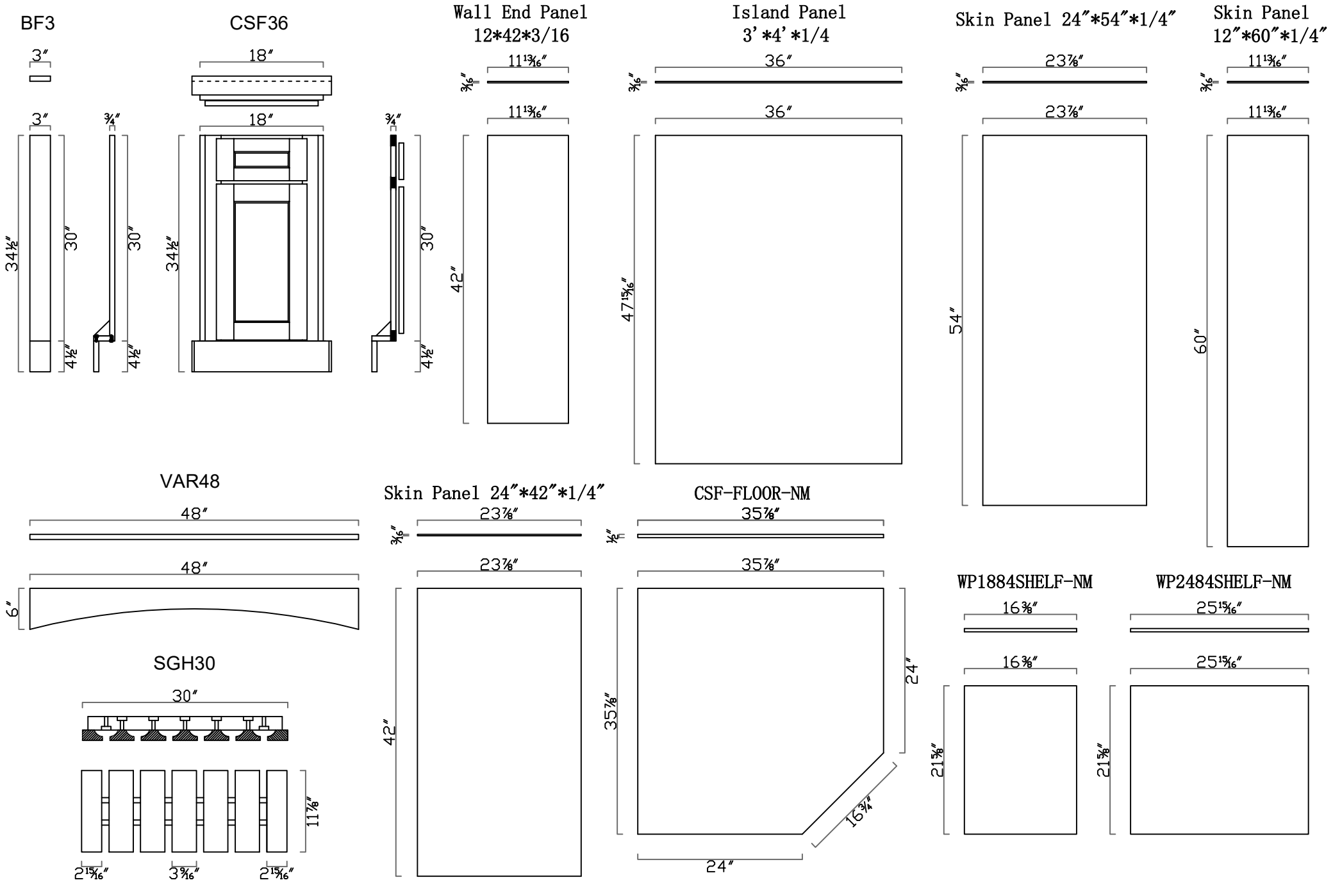

Accessories

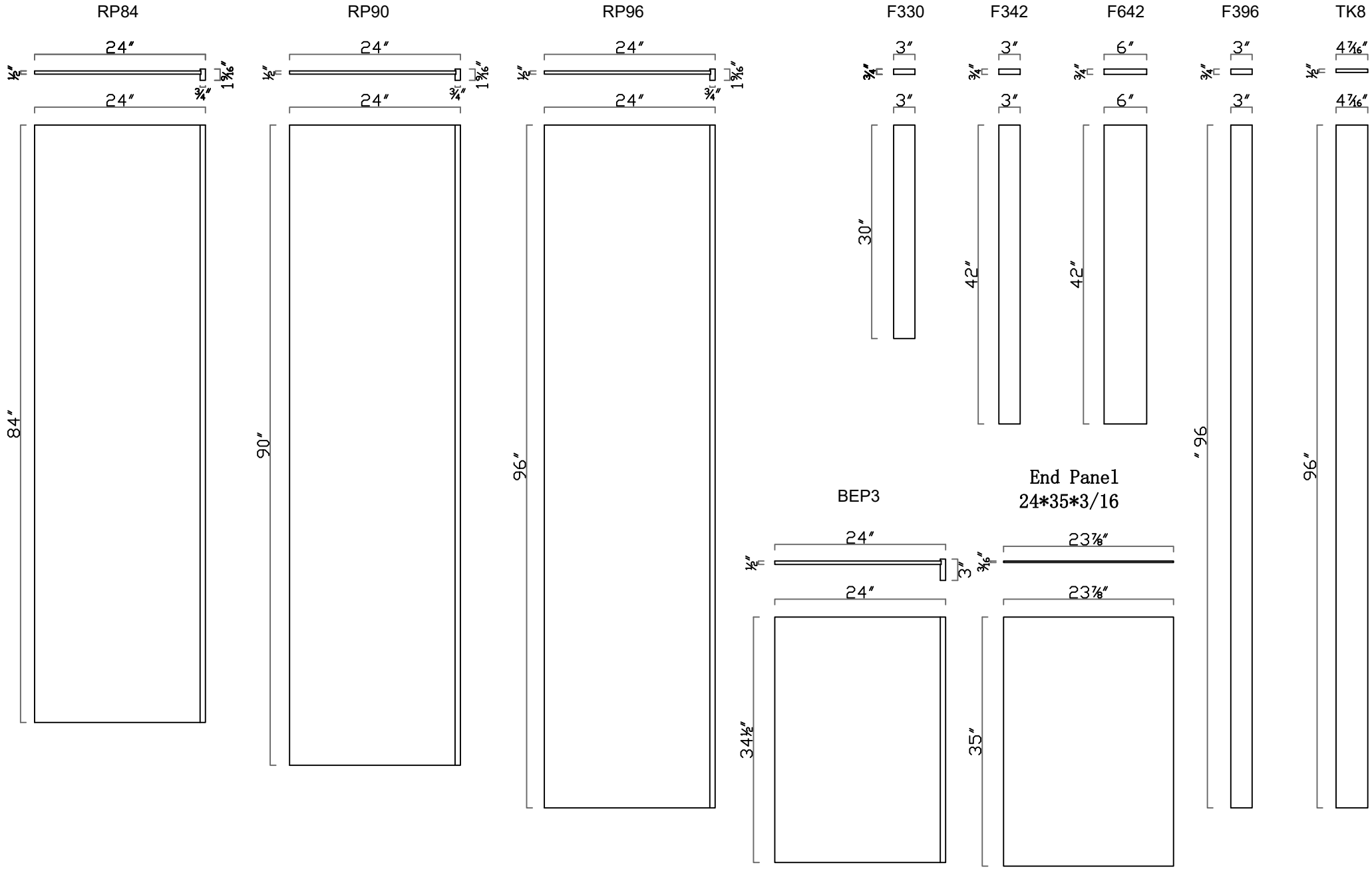

Accessories

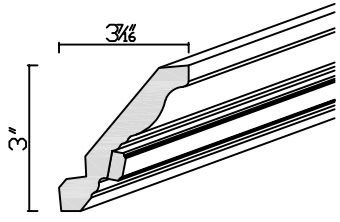

CM8+DM8

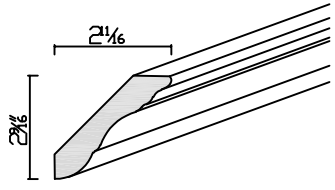

CM8

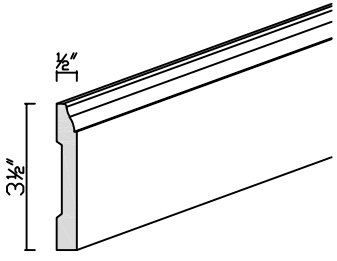

FBM8

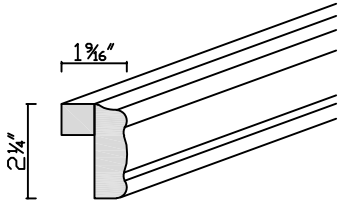

LRM7

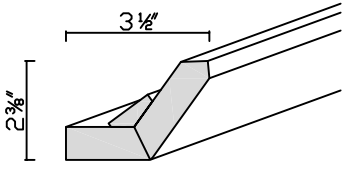

SM8

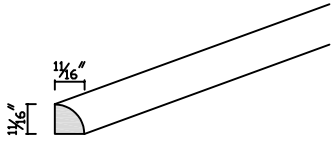

QR8

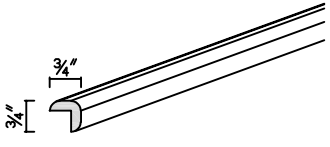

OSC7

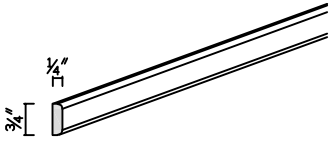

SCM7

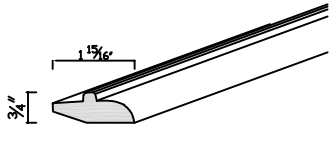

LRM7

GHD